Amphenol
MILITARY & AEROSPACE

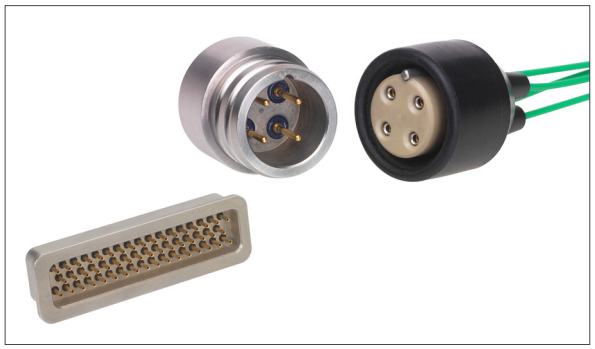

HERMETIC SOLUTIONS

Amphenol Military & Aerospace Hermetic Products

AMAO HERMETIC SOLUTIONS

Amphenol Aerospace

Hermetic connectors are essential to maintain system integrity in applications where the reliability and performance of electrical connectors are critical, such as gas-tight barriers or areas with high-pressure differentials.

Amphenol Military Aerospace Operations (AMAO) uses a wide range of materials and manufacturing capabilities to provide standard and custom products for glass-to-metal seals and lightweight epoxy backfilled solutions.

Hermetic seals can be supplied in multi-pin preforms or, for high pressure applications (up to 90,000 psi), in individual glass beads.

Such seals can be manufactured using a range of alternative shell and pin materials including; stainless steel, aluminum, titanium, inconel, thermocouple materials, molybdenum, and more. AMAO also offers high speed hermetics with capabilities to manufacture impedance-matched, glass-sealed, coax hermetic interconnects.

Quality programs include advanced mechanical and electrical inspections, as well as nondestructive testing and pressure testing. 100% leak testing can be carried out in house for fail-safe hermeticity. Customers can choose from our standard product range or bespoke concept-to-supply solutions.

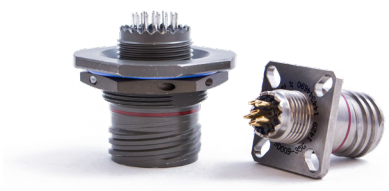

LIGHTWEIGHT ALTERNATIVE FOR SEALED CONNECTORS:

AMAO epoxy-sealed connectors are a lightweight alternative to glass-sealed hermetic connectors for use in avionics and other weight-sensitive applications where a high level of sealing is required. Epoxy-sealed connectors are an optimal solution when increasingly stringent sealing requirements must be met. See our online Filter Catalog for more information www.amphenol-aerospace.com.

FEATURES AND BENEFITS:

- Same epoxy as used in EMI filter connectors
- Less than 1 x 10-5 cc of He/sec leak rate
- Maintained after temperature cycling, 5 cycles -55 to +125°C
- Custom designs available with lower leak rates upon request
- Aluminum shells with Electroless nickel plating standard
  - Also available in Durmalon and O.D. Cadmium finishes. Steel available upon request
- Accessory threads sized for standard backshells
- Intermateable & inter-mountable with standard 38999 Series III plugs
- Uses Amphenol's standard "Filter Epoxy Compound" - 50 years of proven reliability and experience

MIL-SPEC-TYPE HERMETIC:

Amphenol glass sealed hermetic connectors are available in a wide variety of Mil-Spec configurations.

- Leakage rate of 1 x 10-7 cc of He/sec or less
- Fused glass insert in steel shell
- High volume manufacturing options

Amphenol maintains the following QPLs for hermetic products

- MIL – DTL 38999 Series I, II, III
- MIL – DTL 26482 Series I, II
- MIL – DTL 83723 Series III, Pyle
- Commercial 26500 Type (Threaded or Bayonet)
- All styles are also available in Non MIL – SPEC, Commercial options that will meet the MIL – SPEC requirements

GLOBAL LOCATIONS

Amphenol Aerospace

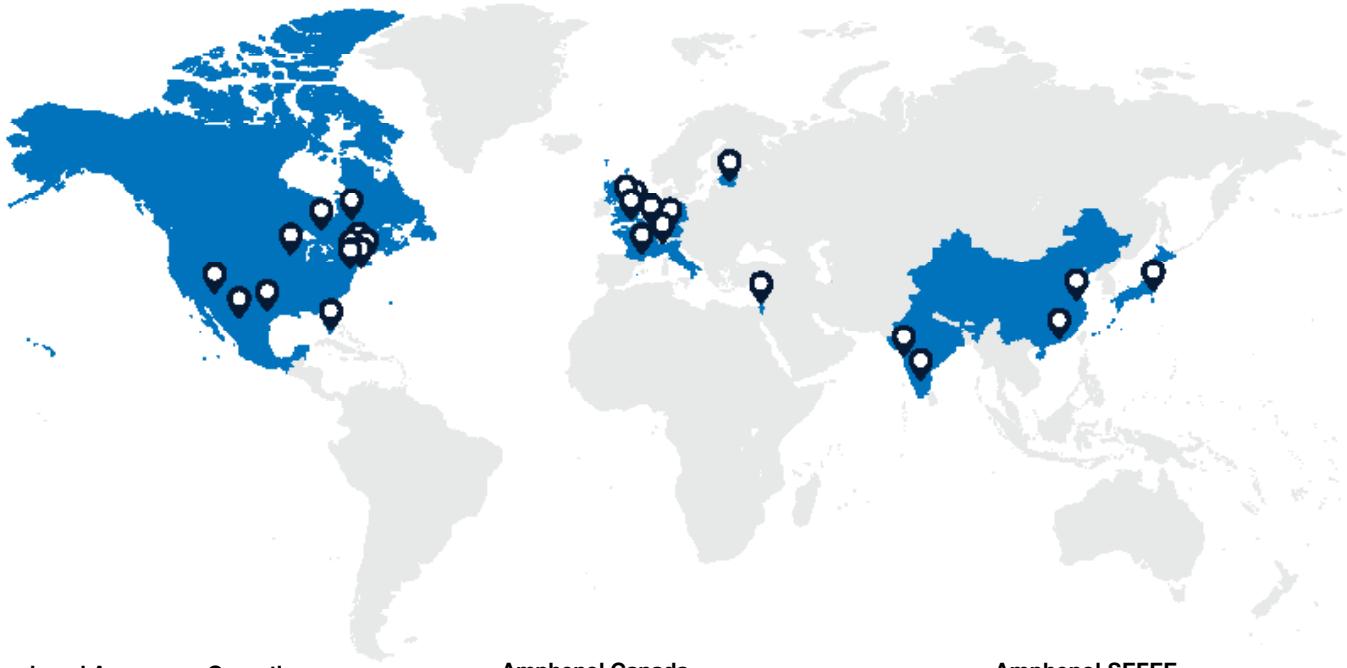

Amphenol Aerospace Operations
40-60 Delaware Avenue
Sidney, NY 13838
800-678-0141

Amphenol Commercial Air Division
40-60 Delaware Avenue
Sidney, NY 13838
1-800-687-0141

Amphenol Nexus Technologies
316 Courtland Avenue
Stamford, CT 06906
203-327-7300

Amphenol PCD
72 Cherry Hill Drive
Beverly, MA 01915
978-624-3400

Amphenol SV Microwave
2400 Centrepark West Drive
West Palm Beach, FL
561-840-1800

Amphenol Times Microwave, Inc.
358 Hall Avenue
Wallingford, CT 06492
800-867-2629

Amphenol Fiber Systems International
1300 Central Expressway North, Suite 100
Allen, TX 75013
214-547-2400

Amphenol Borisch Technologies
4511 East Paris Avenue
Grand Rapids, MI 49512
616-554-9820

Amphenol Printed Circuits
91 Northeastern Boulevard
Nashua, NH 03062
603-324-4500

Amphenol Canada
5950 14th Ave
Markham, ON L3S 3K5
416-291-4401

Amphenol XMA
7 Perimeter Road
Manchester, NH 03103
603-222-2256

Amphenol Q Microwave
1591 Pioneer Way
El Cajon, CA 92020
619-258-7322

Amphenol CIT
100 Tensolite Dr.
St. Augustine, FL 32092
800-458-9960

Amphenol Invotec
Unit 1-3, Hedging Lane Industrial Estate
Dosthill, Tamworth, B77 5HH United Kingdom
+44 (0) 1827 263250

Amphenol Ionix Systems
Prospect House, Taylor Business Park
Risley, Warrington, WA3 6HP United Kingdom
+44 (0) 1942 685200

Amphenol Limited
Thanet Way
Whitstable, Kent, CT5 3JF United Kingdom
+44 (0) 1227 773200

Amphenol Socapex
948 Promenade De L'Arve – BP 29
74311 Thyez France
+33 (0) 4 50 89 28 00

Amphenol Air LB SAS
2 Rue Clément Ader, Zac de Wé
08110 Carignan France
+33 (0) 03 24 22 78 49

Amphenol AirLB GmbH
Am Kleinbahnhof 4
D-66740 Saarlouis Germany
+49 (0) 68 31/98 10 0

Amphenol SEFEE
Z.I. des Cazes – BP243
12402 Saint-Affrique Cedex France
+33 (0) 5 65 98 11 00

Amphenol Interconnect India
105, Bhosari Industrial Area
Pune – 411 026 India
+91 20 27120363

Amphenol Japan, Ltd.
471-1, Deba, Ritto-City
Shiga, 520 3041 Japan
+81 77 553 8501

Amphenol Martec Limited
St. Augustines Business Park
Swalecliffe, Whitstable, Kent
CT5 2QJ United Kingdom
+44 (0) 1227 793 733

Amphenol Optimize
Carretera Internacional Km 6.5
Col. Parque Industrial
Nogales, Sonora, México. C.P. 84094
+52 (631) 311-160

Amphenol Ionix Systems OÜ
Pikk Street 59b
Kuressaare 93815 Estonia
+372 4521 780

AMAO – European Sales Operations
Via Barbaiana 5
20020 Lainate Milano, Italy
+39 02 932 541

Amphenol Bar-Tec Ltd.
3 Hagavish st
POB 2479 Kfar-Saba 44641
Israel
+972-9-7644100\

Phitek
Level 4, 2 Kingdon Street
Newmarket, Auckland 1023
New Zealand
+64 9 524 2984

Table of Contents

Amphenol Aerospace

Hermetic Capabilities 3
Hermetic Sealed Guide 4

Hermetic MIL-DTL-38999, Series I LJT, II JT, III TV:
Insert Availability and Identification Chart 5-6
Insert Arrangements 7-9
Thermocouple Contacts/Sealing Plugs/Finishing Data 10

Hermetic MIL-DTL-38999, Series III TV 11
Hermetic Military, How to Order 12
How to Order (Commercial) 13
Hermetic Box Mounting Receptacle, Military (D38999/21), Commercial (TVPS02) 14
Hermetic Jam Nut Receptacle, Military (D38999/23), Commercial (TVS07) 15
Hermetic Solder Mounting Receptacle, Military (D38999/25), Commercial (TVSI) 16
Hermetic Wall Mounting Receptacle, Military (D38999/27), Commercial (TVSHIY) 16
PCB Hermetic Box Mounting Receptacle, Commercial 17
PCB Hermetic Jam Nut Receptacle, Commercial 18
PCB Hermetic Solder Mounting Receptacle, Commercial 19
PCB Hermetic Weld Mounting Receptacle, Commercial 20

MIL-DTL-38999/27599, Series II JT 21
Military to Commercial Shell Style Conversion Table, How to Order (Military) 22
How to Order (Commercial) 23
Wall Mounting Receptacle, Military (MS27475 & MS27482), Commercial (JT00 & JTS00) 24
Box Mounting Receptacle, Military (MS27476), Commercial (JT02 & JTS02) 24
Jam Nut Receptacle, Military (MS27477 & MS27483), Commercial (JT07 & JTS07) 25
Solder Mounting Receptacle, Military (MS27478 & MS27503), Commercial (JTI & JTSI) 25
PCB Wall Mounting Receptacle Hermetic, (JT00) 26
PCB Box Mounting Receptacle, Commercial JT02 27
PCB Jam Nut Receptacle, Commercial (JT07) 28
PCB Solder Mounting Receptacle, Commercial (JTI) 29

MIL-DTL-38999/ 27599, Series I LJT 30
Military to Commercial Shell Style Conversion Table, How to Order (Military) 31
How to Order (Commercial) 32
Wall Mounting Receptacle, Military (MS27469), Commercial (LJT00) 33
Jam Nut Receptacle, Military (MS27470) Commercial (LJT07 & LJTS07) 34
Solder Mounting Receptacle, Military (MS27471), Commercial (LJTI & LJTSI) 35
PCB Hermetic Wall Mounting Receptacle, (LJT00) 36
PCB Hermetic Jam Nut Receptacle 37
PCB Hermetic Solder Mounting Receptacle, (LJTI) 38

SJT, How to Order, Alternate Rotations 40
SJTIY – Hermetic, Solder Mounting Receptacle 41
SJT07Y – Hermetic, Jam Nut Receptacle 41

Aquacon Series, Specifications, Alternate Positioning 43
Insert Availability 44
Insert Arrangements 45-46
How to Order 47
AJ7H / AS7H Hermetic Jam Nut Receptacle 48
AJ0H Hermetic Square Flange Receptacle 49
Installation Instructions, Application Tools 50

2M Series Selection Table 52
2M801, 2M803, 2M804 and 2M805 52
Insert Arrangements 53-55

2M805 Tri-Start Hermetic Receptacle 57
Ordering Guide for 2M805-006 57
2M805 Tri-Start Flange Mount Hermetic, 2M805-006-02 58
2M805 Tri-Start Solder Mount Hermetic, 2M805-006-03 59
2M805 Tri-Start Jam Nut Hermetic, 2M805-006-07 60

2M804 Push-Pull Hermetic Receptacle 61
Ordering Guide for 2M804-006 62
2M804 Push-Pull Rear Panel Jam Nut Hermetic, 2M804-006-07 63
2M804 Front Panel Jam Nut Hermetic, 2M804-006-00 64

2M803 Hermetic 65
Ordering Guide for 2M803-006 Receptacles 66
2M803 Hermetic, Flange Mount and Jam Nut 2M803-006-02 and -07 67

2M801 Hermetic 68
Ordering Guide for Hermetic Receptacle 2M801-012 69
2M801 Hermetic, Jam Nut Connector 2M801-012-07 70
Hermetic Square Flange Connector 2M801-012-02 71
Hermetic Weld Mount Connector 2M801-012-03 72

Table of Contents

MIL-DTL-83723, Series III, Pyle®	**74**
Manufacturer's Specifications	74
Hermetic Receptacles - Quick Reference	75-76
Insert Availability and Identification, Alternate Keying Positions	77
Insert Arrangements	78
How to Order – Hermetic, Military or Pyle Commercial	79
Hermetic Square Flange Mount, Threaded Coupling	80
Military (MS83723/88), Commercial (BTY, BFY, BNY)	80
Hermetic Jam Nut (D-Hole Mount), Threaded Coupling	81
Military (MS83723/89), Commercial (BTY, BFY, BNY)	81
Hermetic Solder/Weld Mount Receptacle, Threaded Coupling	82
Military (M83723/90), Commercial (BTY, BFY, BNY)	82

Hermetic MIL-DTL-26482, Series I	**83**
Insert Availability Chart	84
Insert Arrangements	85
Alternate Positioning	86
Hermetic MIL-DTL-26482, Series I, How to Order	87
PTIH (MS3113H), Hermetic Solder Mounting Receptacle	88
PT02H, Hermetic Solder Mounting Receptacle	89
PT07H (MS3114H), Hermetic Jam Nut Receptacle	90
Commercial 26500, Pyle, Insert Arrangements	92
Pyle ZZL/ZZB, MIL-DTL-26500 TYPE	93
Hermetic (three styles), Threaded or Bayonet	93

Hermetic Capabilities

Amphenol Aerospace

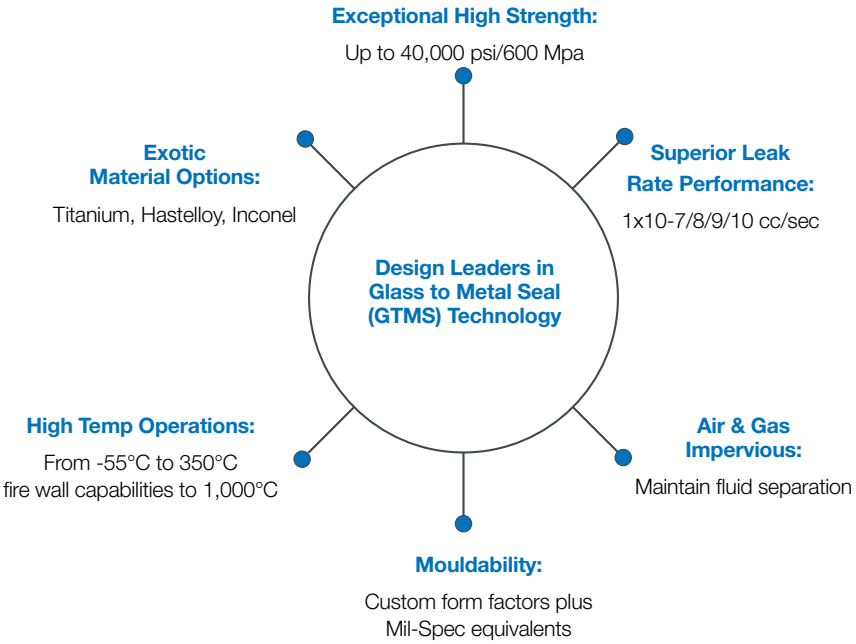

Custom Design Options

CUSTOM CONNECTORS

- Customise and add functionality to hermetic Mil-Spec connectors
- Exotic material selection

VACUUM CONNECTORS

- Standard flange forms (e.g. CF : KF)
- Minimal trapped volumes

GTMS FEED-THROUGH AND HEADERS

- Matched or Compression Seals
- Optimum, custom mounting arrangements for system integration

RECTANGULAR HERMETICS

- Micro-D and D-Sub
- Other form factors

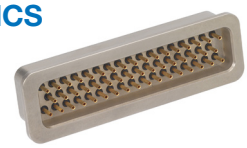

COAXIAL HERMETIC

- Industry standard BNC, SMA, SMB & N type
- 0, 75 or 90 Ω and other impedance options

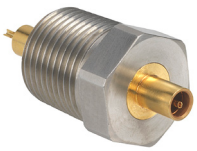

FILTERED INTERCONNECTS

- EMI/RFI & lightning strike protection
- Space saving compact design solutions

HIGH SPEED HERMETICS

- USB, ethernet & low resistivity contacts options
- Low insertion loss and reflection coefficients

SUB-SEA INTERCONNECTS

- Pressure differentials up to 40,000psi
- Booted and over moulded custom designs

Hermetic Sealed Guide

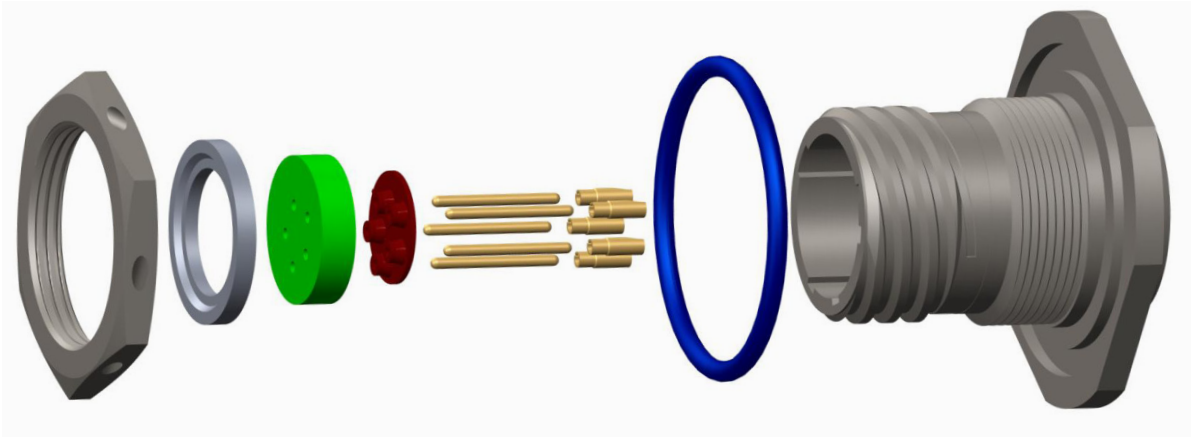

TIPS FOR CUSTOMIZING HERMETICS:

1. How many Contacts?

Consider including a number of redundant contacts to accommodate any system developments you have planned for the future, or to comply with specified growth provisions.

2. What are the electrical requirements?

Work out a steady state and peak requirement for both the current and voltage.

3. Will your Glass-to-Metal Sealing be under any pressure?

Depending on the medium (for example, oil, water, or a vacuum) there may be a pressure differential to consider. Glass-to-Metal Sealing (GTMS) can be supplied in multi-pin preforms or, for high pressure applications in individual glass beads.

4. How will your GTMS be attached?

Will it be secured with a standard O-ring, for example, or welded in place?

5. What are your cable interface requirements?

Be sure to include any instructions for screen termination, potting requirements, and/or cable strain relief.

6. Do you require custom functionality?

If you have any specific requirements, such as electromagnetic compatibility (EMC) filters or printed circuit board (PCB) mounting, make sure they are included in your design specification.

7. What are your plating requirements?

We offer a wide range of in-house plating options, including tin, nickel, and hard and soft gold. We can also customize the plating to meet any special requirements. Note that gold-plated solder contacts should either be desoldered before installation, or appropriate plating thickness specified, to avoid solder embrittlement.

8. Are there any environmental factors?

If your application will be operating in a harsh or hostile environment (exposed to shock, vibration, thermal changes or extreme temperatures, for example) these will need to be factored into the design.

9. What are the qualification requirements?

If qualification tests are required, these should be discussed and specified during the design phase. We are able to perform most qualification tests on the appropriate levels of assembly.

10. What testing will you need?

Examples include leak testing, pressure testing, and geometrical and electrical testing; including breakdown, voltage, and insulation resistance of finished parts.

Cabling and wiring too?

If you would like to extend your brief to include your cabling and wiring requirements, we can address those as well.

Hermetic MIL-DTL-38999, Series I LJT, II JT, III TV

Insert Availability and Identification Chart

Amphenol Aerospace

Series	Series	Series	Military	Hermetic											
JT II	LJT I	TV III	III	Class H	Class Y	TV*	Service Rating	Total Contacts	22D	22M	22	20	16	12
8-3n				P	P		M	3				3		
8-6				P	P		M	6		6				
	9-6			P	P									
8-35				P	P		M	6	6					
	9-35	9-35	A35	P	P	P								
8-44				P	P		M	4			4			
8-98				P	P		I	3				3		
	9-98	9-98	A98	P	P	P								
	11-2H	11-2H	B2	P**			I	2					2	
10-4							I	4				4		
	11-4	11-4												
10-5				P	P		I	5				5		
	11-5	11-5	B5			P								
10-13				P	P		M	13		13				
	11-13			P	P									
10-35				P	P		M	13	13					
	11-35	11-35	B35	P	P	P								
10-98				P	P		I	6				6		
	11-98	11-98	B98	P	P	P								
10-99				P	P		I	7				7		
	11-99	11-99	B99			P								
12-3				P	P		II	3					3	
12-4				P	P		I	4					4	
	13-4H	13-4H	C4	P	P	P								
12-8				P	P		I	8				8		
	13-8	13-8	C8	P	P	P								
12-22				P	P		M	22		22				
	13-22			P	P									
12-35				P	P		M	22	22					
	13-35	13-35	C35	P	P	P								
12-98				P	P		I	10				10		
	13-98	13-98	C98	P	P	P								
14-5							II	5					5	
	15-5													
14-15				P	P		I	15				14	1	
	15-15	15-15	D15	P	P	P	I	15				14	1	
14-18				P	P		I	18				18		
	15-18	15-18	D18	P	P	P								
	15-19	15-19	D19	P	P	P	I	19				19		
14-35				P	P		M	37	37					
	15-35	15-35	D35	P	P	P								
14-37				P	P		M	37		37				
	15-37			P	P									
14-68n				P	P		1	8					8	
14-97				P	P		I	12				8	4	
	15-97	15-97	D97	P	P	P								
16-6				P	P		I	6						6
	17-6	17-6	E6	P	P	P								
16-8				P	P		II	8					8	
	17-8H	17-8H	E8	P	P	P								
16-13							I	13					13	
	17-13													
16-26				P	P		I	26				26		
	17-26	17-26	E26	P	P	P								
16-35				P	P		M	55	55					
	17-35	17-35	E35	P	P	P								
16-55				P	P		M	55		55				
	17-55			P	P									
16-99				P	P		I	23				21	2	
	17-99	17-99	E99	P	P									
18-11				P	P		II	11					11	
	19-11H	19-11H	F11	P	P	P								
18-32				P	P		I	32				32		
	19-32	19-32	F32	P	P	P								
18-35				P	P		M	66	66					
	19-35	19-35	F35	P	P	P								
18-66				P	P		M	66		66				
	19-66			P	P									

P Available with Pin contacts only
n Not Mil-Qualified.
* Hermetic inserts - solder termination standard. (Contact Amphenol Aerospace for optional PCB or eyelet termination).
H Ground plane proprietary option available.
(2) Pin inserts only, not tooled for RP or 02RE (Consult Amphenol Aerospace for availability)

Hermetic MIL-DTL-38999, Series I LJT, II JT, III TV

Insert Availability and Identification Chart

Series	Series	Series	Military	Hermetic										
JT II	LJT I	TV III	III	Class H	Class Y	TV*	Service Rating	Total Contacts	22D	22M	22	20	16	12
20-1				P	P		M	79		79				
	21-1			P	P									
20-11							I	11						11
	21-11H	21-11H	G11											
20-16				P	P		II	16					16	
	21-16H	21-16H	G16	P	P	P								
20-35				P	P		M	79	79					
	21-35	21-35	G35	P	P	P								
20-39				P	P		I	39				37	2	
	21-39	21-39	G39	P	P	P								
20-41				P	P		I	41				41		
	21-41	21-41	G41	P	P	P								
22-1				P	P		M	100		100				
	23-1			P	P									
22-2				P	P		M	85			85			
	23-2			P	P									
22-21				P	P		II	21					21	
	23-21H	23-21H	H21	P	P	P								
22-32				P	P		I	32				32		
22-35				P	P		M	100	100					
	23-35	23-35	H35	P	P	P								
22-53n							I	53				53		
	23-53	23-53	H53	P	P	P								
22-55				P	P		I	55				55		
	23-55	23-55	H55			P								
24-1				P	P		M	128		128				
	25-1			P	P									
24-4				P	P		I	56				48	8	
	25-4	25-4	J4			P								
24-19n				P	P		I	19						19
	25-19H	25-19H	J19			P								
24-24				P	P		I	24					12	12
	25-24H	25-24H	J24	P	P									
24-35				P	P		New	128	128					
	25-35	25-35	J35	P	P	P	M							
24-61				P	P		I	61				61		
	25-61	25-61	J61	P	P	P								

P Available with Pin contacts only
n Not Mil-Qualified.
* Hermetic inserts - solder termination standard. (Contact Amphenol Aerospace for optional PCB or eyelet termination).
H Ground plane proprietary option available.
(2) Pin inserts only, not tooled for RP or 02RE (Consult Amphenol Aerospace for availability)

Hermetic MIL-DTL-38999, Series I LJT, II JT, III TV

Insert Arrangements

Amphenol Aerospace

Front face of pin inserts illustrated

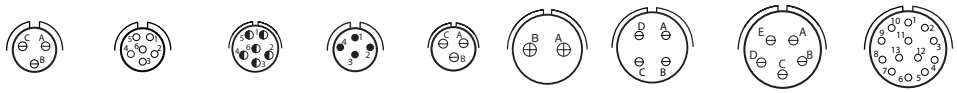

Shell Size & Insert Arrg. for:									
Series II JT	8-3	8-6	8-35	8-44	8-98		10-4	10-5	10-13
Series I LJT	9-3	9-6	9-35	9-44	9-98	11-2	11-4	11-5	11-13
Series III TV			9-35		9-98	11-2	11-4	11-5	
Service Rating	M	M	M	M	I	I	I	I	M
# of Contacts	3	6	6	4	3	2	4	5	13
Contact Size	20	22M	22D	22	20	16	20	20	22M

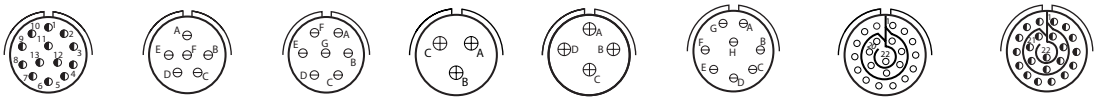

Shell Size & Insert Arrg. for:								
Series II JT	10-35	10-98	10-99	12-3	12-4	12-8	12-22	12-35
Series I LJT	11-35	11-98	11-99	13-3	13-4	13-8	13-22	13-35
Series III TV	11-35	11-98	11-99		13-4	13-8		13-35
Service Rating	M	I	I	II	I	I	M	M
# of Contacts	13	6	7	3	4	8	22	22
Contact Size	22D	20	20	16	16	20	22M	22D

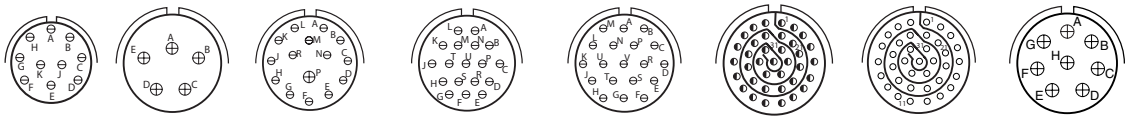

Shell Size & Insert Arrg. for:								
Series II JT	12-98	14-5	14-15	14-18	14-19	14-35	14-37	14-68
Series I LJT	13-98	15-5	15-15	15-18	15-19	15-35	15-37	15-68
Series III TV	13-98	15-5	15-15	15-18	15-19	15-35		
Service Rating	I	II	I	I	I	M	M	I
# of Contacts	10	5	14 1	18	19	37	37	8
Contact Size	20	16	20 16	20	20	22D	22M	16

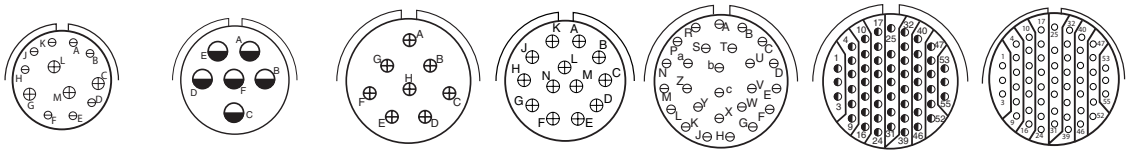

Shell Size & Insert Arrg. for:							
Series II JT	14-97	16-6	16-8	16-13	16-26	16-35	16-55
Series I LJT	15-97	17-6	17-8	17-13	17-26	17-35	17-55
Series III TV	15-97	17-6	17-8		17-26	17-35	
Service Rating	I	I	II	I	I	M	M
# of Contacts	8 4	6	8	13	26	55	55
Contact Size	20 16	12	16	16	20	22D	22M

HD: High Density HD38999 (use size 23 contacts only)

CONTACT LEGEND

12	16	20	22	22M	22D	23

Hermetic MIL-DTL-38999, Series I LJT, II JT, III TV

Insert Arrangements

Front face of pin inserts illustrated

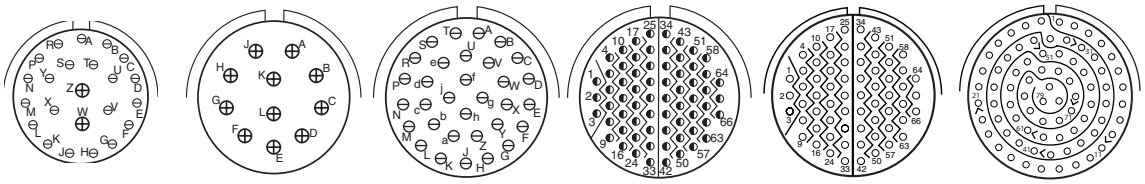

Shell Size & Insert Arrg. for:							
Series II JT	16-99		18-11	18-32	18-35	18-66	20-1
Series I LJT	17-99		19-11	19-32	19-35	19-66	21-1
Series III TV	17-99		19-11	19-32	19-35		
Service Rating	I		II	1	M	**M**	M
# of Contacts	21	2	11	32	66	**66**	79
Contact Size	20	16	16	20	22D	**22M**	22M

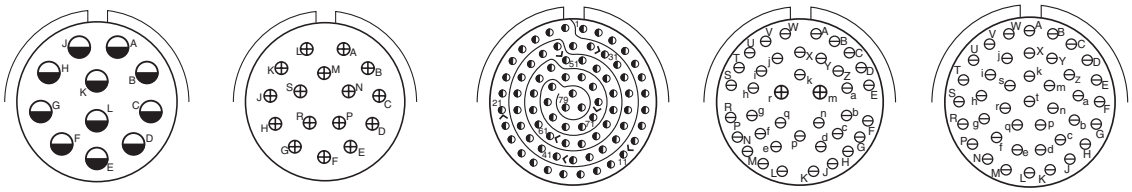

Shell Size & Insert Arrg. for:					
Series II JT	20-11	20-16	20-35	20-39	20-41
Series I LJT	21-11	21-16	21-35	21-39	21-41
Series III TV	21-11	21-16	21-35	21-39	21-41
Service Rating	**I**	II	M	1	I
# of Contacts	**11**	16	79	37 2	41
Contact Size	**12**	16	22D	20 16	20

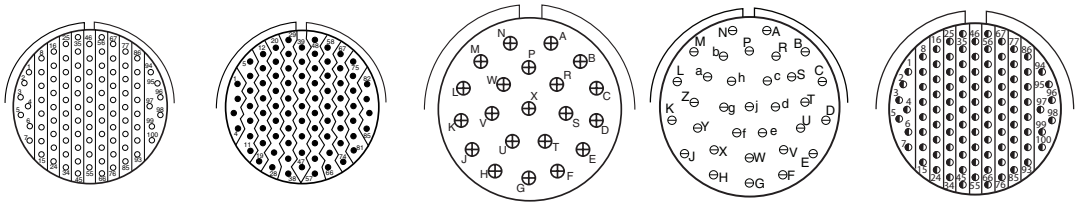

Shell Size & Insert Arrg. for:					
Series II JT	22-1	22-2	22-21	22-32	22-35
Series I LJT	23-1	23-2	23-21	23-32	23-35
Series III TV			23-21		23-35
Service Rating	M	M	II	I	M
Number # Contacts	100	85	21	32	100
Contact Size	22M	22	16	20	22D

CONTACT LEGEND	◒	⊕	⊖	•	○	◐	◑
	12	16	20	22	22M	22D	23

Hermetic MIL-DTL-38999, Series I LJT, II JT, III TV

Insert Arrangements

Amphenol Aerospace

Front face of pin inserts illustrated

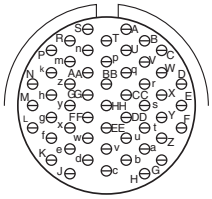
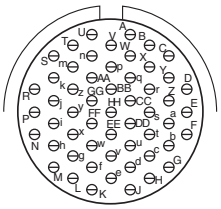
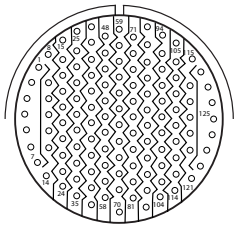
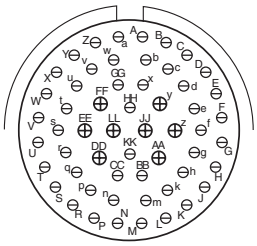

Shell Size & Insert Arrg. for:					
Series II JT	22-53	22-55	24-1	24-4	
Series I LJT	23-53	23-55	25-1	25-4	
Series III TV	23-53	23-55		25-4	
Service Rating	I	I	M	**I**	
# of Contacts	53	55	128	**48**	**8**
Contact Size	20	20	22M	**20**	**16**

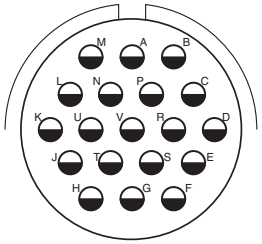
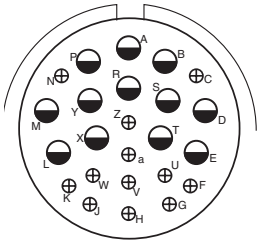
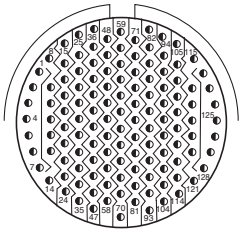
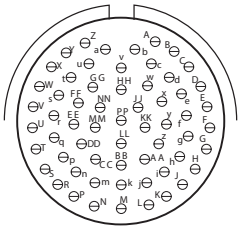

Shell Size & Insert Arrg. for:				
Series II JT	24-19	24-24	24-35	24-61
Series I LJT	25-19	25-24	25-35	25-61
Series III TV	25-19	25-24	25-35	25-61
Service Rating	**I**	**I**	**M**	I
# of Contacts	**19**	**12** **12**	**128**	61
Contact Size	**12**	**16** **12**	**22D**	20

HD: High Density HD38999 (use size 23 contacts only)
Note: MS connector 21-75 is supplied with four size 8 twinax contacts.
Commercial connector 21-75 is supplied with four size 8 coax contacts.
MS connector 21-79 has provision for two size 8 coax contacts.
Coax contacts are not supplied unless specified by customers.

CONTACT LEGEND	12	16	20	22	22M	22D	23

Hermetic MIL-DTL-38999, Series I LJT, II JT, III TV

Thermocouple Contacts/Sealing Plugs/Finishing Data

SERVICE RATING**

Service Rating	Suggested Oper. Voltage (Sea Level)		Test Voltage (Sea Level)	Test Voltage 50,000 Ft.	Test Voltage 70,000 Ft	Test Voltage 110,000 Ft.
	AC (RMS)	DC				
M	400	500	1300 VRMS	550 VRMS	350 VRMS	200 VRMS
N	300	450	1000 VRMS	400 VRMS	260 VRMS	200 VRMS
I	600	850	1800 VRMS	600 VRMS	400 VRMS	200 VRMS
II	900	1250	2300 VRMS	800 VRMS	500 VRMS	200 VRMS

** Please note that the establishment of electrical safety factors is left entirely in the designer's hands, since they are in the best position to know what peak voltage, switching surges, transients, etc. can be expected in a particular circuit.

HERMETIC SHELL COMPONENTS		
Material/Finish	Service Class	
	Military	Commercial
Stainless Steel	Y	Y
Stainless Steel with Nickel Plate	N	YN

HERMETIC CONNECTORS				
Finish	Suffix		Indicated Finish Standard for JT Types Listed Below	Indicated Finish Standard for LJT Types Listed Below
	Military	Commercial		
Carbon Steel Shell Tin Plated Shell and Contacts			JT( )H / JT( )Y JTL( )H / JTL( )Y	LJT( )Y LJT( )H
Carbon Steel Shell Tin Plated Shell and Gold Plated Contacts	MS (D)			
Stainless Steel Shell Gold Plated Contacts	MS (E)	(162)	JTS( )Y JTLS( )Y	LJTS( )Y

Series III

MIL-DTL-38999

TRI-START, MIL-DTL-38999, SERIES III WITH STAINLESS STEEL SHELLS

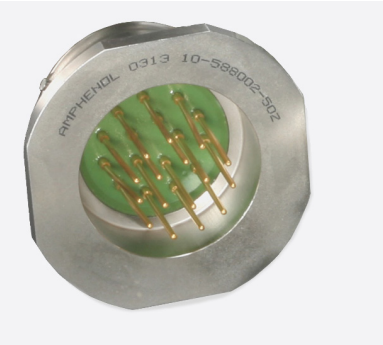

Amphenol ® Tri-Start MIL-DTL-38999* Series III Connectors offer the highest performance capabilities for both general duty and severe environment applications meeting or exceeding MIL-DTL-38999 Series III requirements.

High reliability and increased versatility best describe Amphenol MIL-DTL-38999, Series III circular connectors. Originally designed for the harshest of environments and most demanding of applications, Amphenol MIL-DTL-38999 Series III, Tri-Start connectors continue to evolve in pace withthe needs of an ever-changing market.

STAINLESS STEEL WITH NICKEL PLATING

PASSIVATED STAINLESS STEEL

FEATURES:

- **EMI Shielding**
  Solid metal-to-metal coupling, grounding fingers, electroless nickel plating, and thicker wall sections provide superior EMI shielding capability of 65dB minimum at 10 GHz
- **Contact Protection**
  Recessed pins in this 100% scoop-proof connector minimize potential contact damage
- **Moisture Resistance**
  Improved interfacial seal design helps prevent electrolytic erosion of contacts
- **Corrosion Resistance**
  Shells of stainless steel with nickel plating withstand a 500 hour salt spray exposure
- **Vibration/Shock**
  Operates under severe high temperature vibration, through 200°C
- **Lockwiring Eliminated**
  Unique, self-locking, quick coupling connector eliminates lockwiring
- **Quick Coupling**
  Completely mates and self-locks in a 360° turn of the coupling nut
- **Hermetic**- air leakage limited to 1 X 10^{-7} cm^3 per second

Hermetic Military

How to Order

MILITARY	DESCRIPTION	COMMERCIAL
D38999/21	Hermetic Box Mounting Receptacle	TVPS02Y, TVPS02YN
D38999/23	Hermetic Jam Nut Receptacle	TVS07Y, TVS07YN
D38999/25	Hermetic Solder Mount Receptacle	TVSI
D38999/27	Hermetic Weld Mounted Receptacle	TVSHI

HOW TO ORDER: MILITARY

1. Connector Type	2. Shell Style	3. Service Class	4. Shell Size– Insert Arrangement	5. Contact Type	6. Alternate Keying Position
D38999/	21	Y	G35	P	N

1. CONNECTOR TYPE

38999/	MIL-DTL-38999 III

2. SHELL STYLE

21	Box Mount Receptacle Hermetic
23	Jam Nut Receptacle Hermetic
25	Solder Mount Receptacle Hermetic
27	Weld Mounted Receptacle Hermetic

3. SERVICE CLASS

Military	Finish	RoHS	Material	Material/ Description
N	Stainless Steel w/ Nickel Plate	•	Stainless Steel	Hermetic connectors, corrosion resistant steel, 200°C
Y	Stainless Steel	•	Stainless Steel	Hermetic seal, 200°C passivated stainless steel

4. SHELL SIZE & INSERT ARRANGEMENTS

Shell Size & Insert Arrangements are on pages 5-6. First number represents Shell Size, second number is the Insert Arrangement.

TRIPLE START THREADS

A	B	C	D	E	F	G	H	J	Mil Shell Size
9	11	13	15	17	19	21	23	25	Amphenol Shell size

5. CONTACT TYPE

P	500 Cycle Pin Contacts
X	Pin Contacts - Eyelet
C	PC Tail

6. ALTERNATE KEYING POSITION

A plug with a given rotation letter will mate with a receptacle with the same rotation letter. The angles for a given connector are the same whether it contains pins or sockets. Master key stays fixed, minor keys rotate. Inserts are not rotated in conjunction with the master key/keyway.

RECEPTACLE

(FRONT FACE SHOWN)

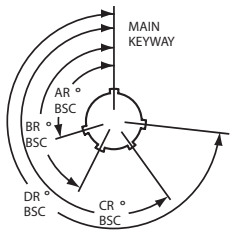

Shell Size	Key & Keyway Arrangement Identification Letter	AR° or AP° BSC	BR° or BP° BSC	CR° or CP° BSC	DR° or DP° BSC
A (9)	N*	105	140	215	265
	A	102	132	248	320
	B	80	118	230	312
	C	35	140	205	275
	D	64	155	234	304
	E	91	131	197	240
B (11) C (13) D (15)	N*	95	141	208	236
	A	113	156	182	292
	B	90	145	195	252
	C	53	156	220	255
	D	119	146	176	298
	E	51	141	184	242
E (17) F (19)	N*	80	142	196	293
	A	135	170	200	310
	B	49	169	200	244
	C	66	140	200	257
	D	62	145	180	280
	E	79	153	197	272
G (21) H (23) J (25)	N*	80	142	196	293
	A	135	170	200	310
	B	49	169	200	244
	C	66	140	200	257
	D	62	145	180	280
	E	79	153	197	272

Hermetic MIL-DTL-38999, Series III TV

Amphenol Aerospace

How to Order (Commercial)

1. Type & Class	2. Shell Size-Insert Arrg.	3. Contact Type	4. Alternate Position
TVS07Y	11-4	P	N

1. SELECT A TYPE & CLASS

		Passivated (Non-Firewall)	Nickel Plated (Non-Firewall)
RATES	Temperature	200˚C	200˚C
	Salt Spray	500 Hrs	500 Hrs
	EMI Shielding	-65dB @ 10GHz	-50dB @ 10GHz
	RoHS	✓	✓
Hermetic	Box Mounting Receptacle	TVPS02Y-	TVPS02YN-
	Jam Nut Receptacle	TVS07Y-	TVS07YN-
	Solder Mount	TVSIY-	TVSIYN-
	Weld Mounting Receptacle	TVSHIY-	TVSHIYN-

2. SHELL SIZE & INSERT ARRANGEMENTS

See table on page 5-6. First number represents Shell Size, second number is the Insert Arrangement.

3. CONTACT TYPE

P	500 Cycle Pin Contacts
X	Pin Contacts - Eyelet

See pages 16-20 for PCB Hermetic Connector options

4. ALTERNATE KEYING POSITION

A plug with a given rotation letter will mate with a receptacle with the same rotation letter. The angles for a given connector are the same whether it contains pins or sockets. Master key stays fixed, minor keys rotate. Inserts are not rotated in conjunction with the master key/keyway.

RECEPTACLE

(FRONT FACE SHOWN)

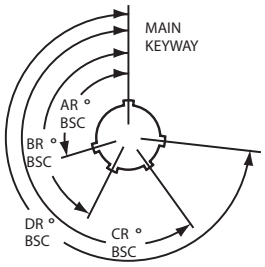

Shell Size	Key & Keyway Arrangement Identification Letter	AR° or AP° BSC	BR° or BP° BSC	CR° or CP° BSC	DR° or DP° BSC
9	N*	105	140	215	265
	A	102	132	248	320
	B	80	118	230	312
	C	35	140	205	275
	D	64	155	234	304
	E	91	131	197	240
11, 13, and 15	N*	95	141	208	236
	A	113	156	182	292
	B	90	145	195	252
	C	53	156	220	255
	D	119	146	176	298
	E	51	141	184	242
17 and 19	N*	80	142	196	293
	A	135	170	200	310
	B	49	169	200	244
	C	66	140	200	257
	D	62	145	180	280
	E	79	153	197	272
21, 23, and 25	N*	80	142	196	293
	A	135	170	200	310
	B	49	169	200	244
	C	66	140	200	257
	D	62	145	180	280
	E	79	153	197	272

Hermetic Box Mounting Receptacle

Military (D38999/21), Commercial (TVPS02)

PART NUMBER BUILDER Page 12
ONLINE CONFIGURATOR www.amphenol-aerospace.com

MILITARY
D38999/21

COMMERCIAL SS
TVPS02Y
TVPS02YN

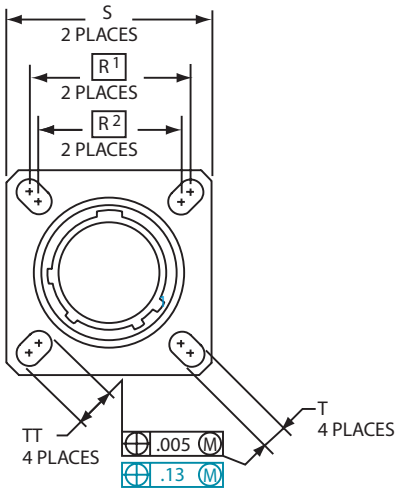

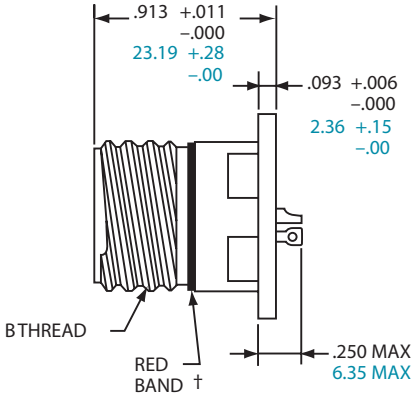

† Red band indicates fully mated
NOTE: Consult Amphenol Aerospace for availability of non-glass-sealed versions with printed circuit tail contacts.

Inches

Shell Size	MS Shell Size Coded	B Thread 0.1P-0.3L-TS (Plated)	R1	R2	S ±.010	T ±.008	TT ±.008
9	A	.6250	.719	.594	.938	.128	.216
11	B	.7500	.812	.719	1.031	.128	.194
13	C	.8750	.906	.812	1.125	.128	.194
15	D	1.0000	.969	.906	1.219	.128	.173
17	E	1.1875	1.062	.969	1.312	.128	.194
19	F	1.2500	1.156	1.062	1.438	.128	.194
21	G	1.3750	1.250	1.156	1.562	.128	.194
23	H	1.5000	1.375	1.250	1.688	.154	.242
25	J	1.6250	1.500	1.375	1.812	.154	.242

Millimeters

Shell Size	MS Shell Size Coded	R1	R2	S ±.25	T ±.20	TT ±.20
9	A	18.26	15.09	23.83	3.25	5.49
11	B	20.62	18.26	26.19	3.25	4.93
13	C	23.01	20.62	28.58	3.25	4.93
15	D	24.61	23.01	30.96	3.25	4.39
17	E	26.97	24.61	33.32	3.25	4.93
19	F	29.36	26.97	36.53	3.25	4.93
21	G	31.75	29.36	39.67	3.25	4.93
23	H	34.93	31.75	42.88	3.91	6.15
25	J	38.10	34.93	46.02	3.91	6.15

All dimensions for reference only

☐ Designates true position dimensioning

Hermetic Jam Nut Receptacle

Military (D38999/23), Commercial (TVS07)

Amphenol Aerospace

HOW TO ORDER Page 12
ONLINE CONFIGURATOR www.amphenol-aerospace.com

MILITARY
D38999/23

COMMERCIAL SS
TVS07Y
TVS07YN

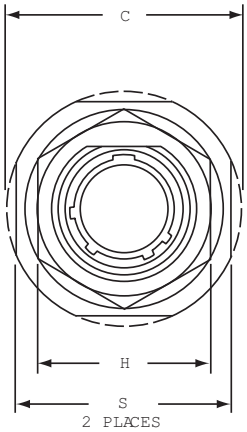

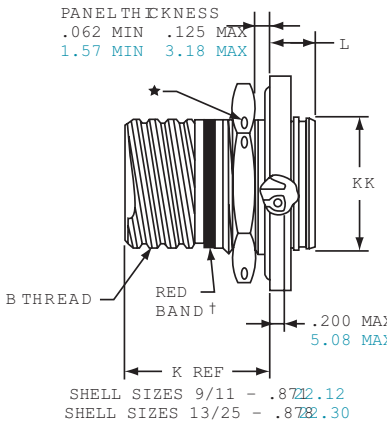

PANEL HOLE DIMENSIONS

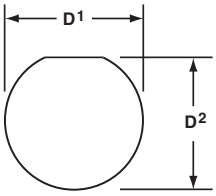

JAM NUT D-HOLE MOUNTING

†Red band indicates fully mated
H.059 dia min. 1.5 dia. min. 3 lockwire holes Formed lockwire hole design (6 holes) is optional.

Inches

Shell Size	MS Shell Size code	B Thread Class 2A 0.1P-0.3L-TS (Plated)	C Max	D[1] +.010 –.000	D[2] +.000 –.010	H Hex +.017 –.016	L Max	S ±.010	KK +.011 –.000
9	A	.6250	1.199	.693	.657	.875	.357	1.062	.642
11	B	.7500	1.386	.825	.770	1.000	.357	1.250	.766
13	C	.8750	1.511	1.010	.955	1.188	.357	1.375	.892
15	D	1.0000	1.636	1.135	1.085	1.312	.357	1.500	1.018
17	E	1.1875	1.761	1.260	1.210	1.438	.357	1.625	1.142
19	F	1.2500	1.949	1.385	1.335	1.562	.381	1.812	1.268
21	G	1.3750	2.073	1.510	1.460	1.688	.381	1.938	1.392
23	H	1.5000	2.199	1.635	1.585	1.812	.381	2.062	1.518
25	J	1.6250	2.323	1.760	1.710	2.000	.381	2.188	1.642

Millimeters

Shell Size	MS Shell Size code	C Max	D[1] +.25 –.00	D[2] +.00 –.25	H Hex +.43 –.41	L Max	S ±.25	KK +.28 –.00
9	A	30.45	17.60	16.70	22.23	9.07	26.97	16.31
11	B	35.20	20.96	19.59	25.40	9.07	31.75	19.46
13	C	38.38	25.65	24.26	30.18	9.07	34.93	22.66
15	D	41.55	28.83	27.56	33.32	9.07	38.10	25.86
17	E	44.73	32.01	30.73	36.53	9.07	41.28	29.01
19	F	49.50	35.18	33.91	39.67	9.68	46.02	32.21
21	G	52.65	38.35	37.08	42.80	9.68	49.23	35.36
23	H	55.85	41.53	40.26	46.02	9.68	52.37	38.56
25	J	59.00	44.70	43.43	50.80	9.68	55.58	41.71

All dimensions for reference only

Hermetic Solder Mounting Receptacle

Military (D38999/25), Commercial (TVSI)

HOW TO ORDER Page 12
ONLINE CONFIGURATOR www.amphenol-aerospace.com

MILITARY
D38999/25

COMMERCIAL SS
TVSIY
TVSIYN

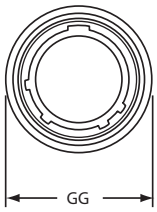

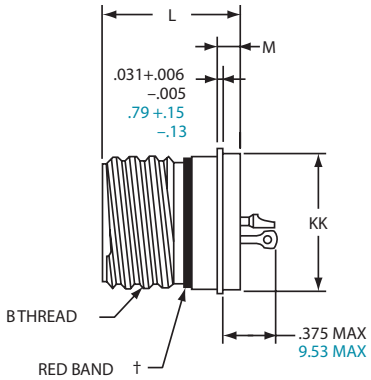

† Red band indicates fully mated

Inches

Shell Size	MS Shell Size Code	B Thread Class 2A 0.1P-0.3L-TS (Plated)	L +.011 –.005	M +.006 –.005	GG Dia. +.011 –.010	KK Dia +.011 –.005
9	A	.6250	.806	.125	.750	.672
11	B	.7500	.806	.125	.844	.781
13	C	.8750	.806	.125	.969	.906
15	D	1.0000	.806	.125	1.094	1.031
17	E	1.1875	.806	.125	1.218	1.156
19	F	1.2500	.806	.125	1.312	1.250
21	G	1.3750	.806	.125	1.438	1.375
23	H	1.5000	.838	.156	1.563	1.500
25	J	1.6250	.838	.156	1.688	1.625

Millimeters

Shell Size	MS Shell Size Code	L +.28 –.00	M +.15 –.13	GG Dia. +.28 –.25	KK Dia +.03 –.13
9	A	20.47	3.18	19.05	17.07
11	B	20.47	3.18	21.44	19.84
13	C	20.47	3.18	24.61	23.01
15	D	20.47	3.18	27.79	26.19
17	E	20.47	3.18	30.94	29.36
19	F	20.47	3.18	33.32	31.75
21	G	20.47	3.18	36.53	34.93
23	H	21.29	3.96	39.70	38.10
25	J	21.29	3.96	42.88	41.28

Hermetic Wall Mounting Receptacle

Military (D38999/27), Commercial (TVSHIY)

HOW TO ORDER Page 12
ONLINE CONFIGURATOR
www.amphenol-aerospace.com

MILITARY
D38999/27

COMMERCIAL SS
TVSHIY
TVSHIYN

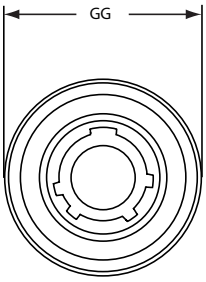

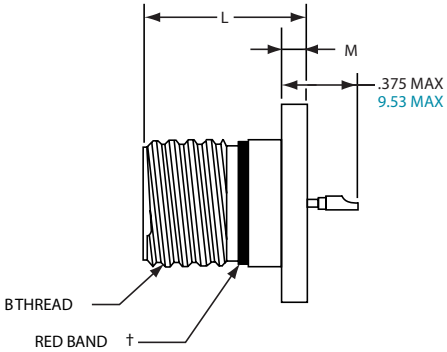

† Red band indicates fully mated

Inches

Shell Size	MS Shell Size Code	B Thread Class 2A 0.1P-0.3L-TS (Plated)	L +.011 –.000	M +.006 –.005	GG Dia. +.011 –.010
9	A	.6250	.806	.125	.973
11	B	.7500	.806	.125	1.095
13	C	.8750	.806	.125	1.221
15	D	1.0000	.806	.125	1.347
17	E	1.1875	.806	.125	1.434
19	F	1.2500	.806	.125	1.579
21	G	1.3750	.806	.125	1.721
23	H	1.5000	.838	.156	1.886
25	J	1.6250	.838	.156	1.973

Millimeters

Shell Size	MS Shell Size Code	L +.28 –.00	M +.15 –.13	GG Dia. +.25 –.00
9	A	20.47	3.18	24.71
11	B	20.47	3.18	27.81
13	C	20.47	3.18	31.01
15	D	20.47	3.18	34.21
17	E	20.47	3.18	36.42
19	F	20.47	3.18	40.11
21	G	20.47	3.18	43.71
23	H	21.29	3.96	47.90
25	J	21.29	3.96	50.11

All dimensions for reference only

PCB Hermetic Box Mounting Receptacle

Commercial

Amphenol Aerospace

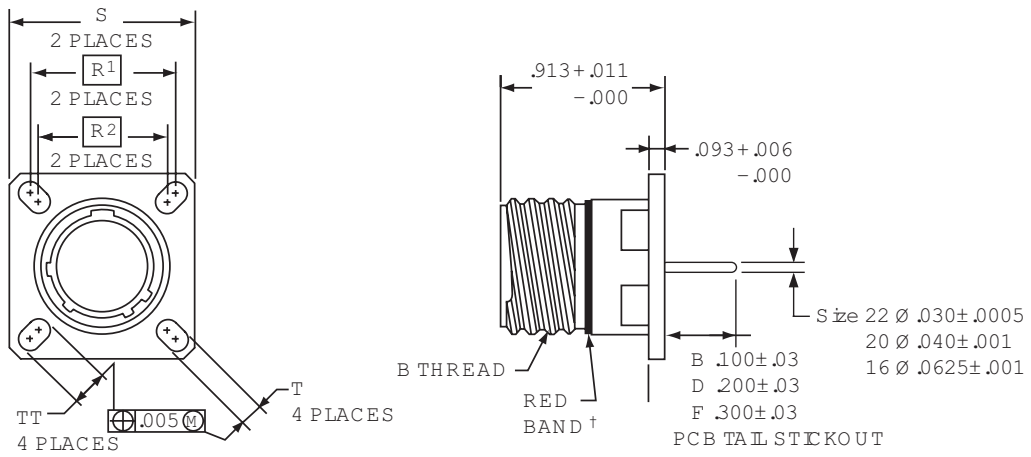

PART # See chart below	1. Base Number	2. Coded Shell Size	3. Insert Arrg.	4. Contact Type/Alt. Keying	5. Shell Finish	6. Tail Length
	10-626	501	-35	P	1	B

HOW TO ORDER

1. BASE NUMBER	
10-626	Base Number for MIL-DTL-38999 Series III Hermetic with PCB Tail

2. CODED SHELL SIZE
See chart below **501-509**, designates size **9-25** shell size.

3. INSERT ARRANGEMENT	
-35	Designates Insert Arrangement Number

Refer to insert availability chart on page 5-6.

4. CONTACT TYPE/ALTERNATE KEYING	
P	Designates Pin Contacts in Normal Position

Refer to page 12 for alternate rotation letters to use.

5. SHELL FINISH	
1	Hermetic seal, passivated Stainless Steel, 200°C
2	Hermetic seal, Stainless Steel w/Nickel Plate
3	Carbon Steel w/reflowed tin plate

6. TAIL LENGTH	
B	.100±.03
D	.200±.03
F	.300±.03

† Red band indicates fully mated

Shell Size	Part Number	B Thread 0.1P-0.3L-TS (Plated)	R1	R2	S ±.010	T ±.008	TT ±.008
9	10-626**501**-XXX	.6250	.719	.594	.938	.128	.216
11	**502-XXX**	.7500	.812	.719	1.031	.128	.194
13	**503-XXX**	.8750	.906	.812	1.125	.128	.194
15	**504-XXX**	1.0000	.969	.906	1.219	.128	.173
17	**505-XXX**	1.1875	1.062	.969	1.312	.128	.194
19	**506-XXX**	1.2500	1.156	1.062	1.438	.128	.194
21	**507-XXX**	1.3750	1.250	1.156	1.562	.128	.194
23	**508-XXX**	1.5000	1.375	1.250	1.688	.154	.242
25	**509-XXX**	1.6250	1.500	1.375	1.812	.154	.242

All dimensions for reference.

☐ Designates true position dimensioning

PCB Hermetic Jam Nut Receptacle

Commercial

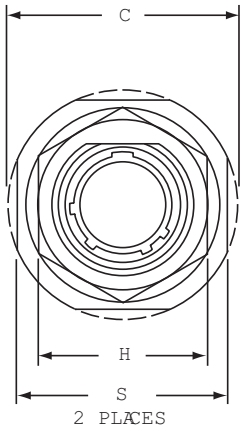

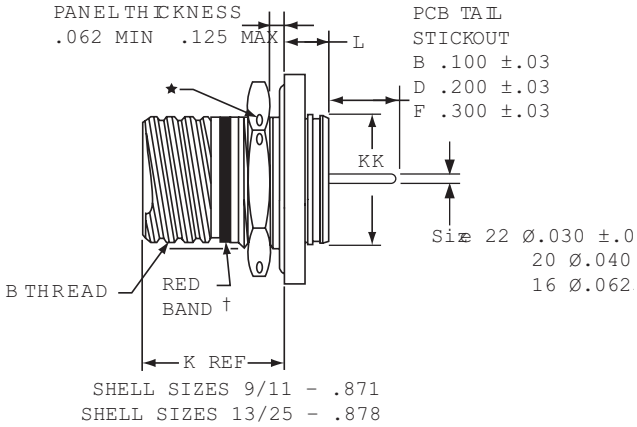

PANEL HOLE DIMENSIONS

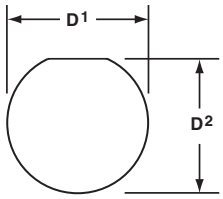

JAM NUT D-HOLE MOUNTING

	1.	2.	3.	4.	5.	6.
PART # See chart below	Base Number	Coded Shell Size	Insert Arrg.	Contact Type/Alt. Keying	Shell Finish	Tail Length
	10-626	471	-35	P	1	B

HOW TO ORDER

1. BASE NUMBER	
10-626	Base Number for MIL-DTL-38999 Series III Hermetic with PCB Tail

2. CODED SHELL SIZE
See chart below **471-479**, designates size **9-25** shell size.

3. INSERT ARRANGEMENT	
-35	Designates Insert Arrangement Number

Refer to insert availability chart on page 5-6.

4. CONTACT TYPE/ALTERNATE KEYING	
P	Designates Pin Contacts in Normal Position

Refer to page 12 for alternate rotation letters to use.

5. SHELL FINISH	
1	Hermetic seal, passivated Stainless Steel, 200°C
2	Hermetic seal, Stainless Steel w/Nickel Plate
3	Carbon Steel w/reflowed tin plate

6. TAIL LENGTH	
B	.100±.03
D	.200±.03
F	.300±.03

† Red band indicates fully mated

H .059 dia. min. (1.5 dia. min.) 3 lockwire holes. Formed lockwire hole design (6 holes) is optional.

Shell Size	Part Number	B Thread Class 2A 0.1P-0.3L-TS (Plated)	C Max	D1 +.010 –.000	D2 +.000 –.010	H Hex +.017 –.016	L Max	S ±.010	KK +.011 –.000
9	10-626**471**-XXX	.6250	1.199	.700	.670	.875	.357	1.062	.642
11	**472**-XXX	.7500	1.386	.825	.770	1.000	.357	1.250	.766
13	**473**-XXX	.8750	1.511	1.010	.955	1.188	.357	1.375	.892
15	**474**-XXX	1.0000	1.636	1.135	1.085	1.312	.357	1.500	1.018
17	**475**-XXX	1.1875	1.761	1.260	1.210	1.438	.357	1.625	1.142
19	**476**-XXX	1.2500	1.949	1.385	1.335	1.562	.381	1.812	1.268
21	**477**-XXX	1.3750	2.073	1.510	1.460	1.688	.381	1.938	1.392
23	**478**-XXX	1.5000	2.199	1.635	1.585	1.812	.381	2.062	1.518
25	**479**-XXX	1.6250	2.323	1.760	1.710	2.000	.381	2.188	1.642

All dimensions for reference only.

PCB Hermetic Solder Mounting Receptacle

Commercial

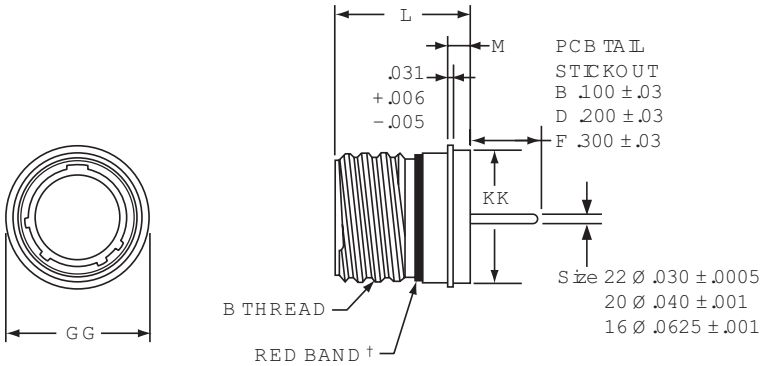

	1.	2.	3.	4.	5.	6.
PART # See chart below	Base Number	Coded Shell Size	Insert Arrg.	Contact Type/Alt. Keying	Shell Finish	Tail Length
	10-626	481	-35	P	1	B

HOW TO ORDER

1. BASE NUMBER	
10-626	Base Number for MIL-DTL-38999 Series III Hermetic with PCB Tail

2. CODED SHELL SIZE
See chart below **481-489**, designates size **9-25** shell size.

3. INSERT ARRANGEMENT	
-35	Designates Insert Arrangement Number

Refer to insert availability chart on page 5-6.

4. CONTACT TYPE/ALTERNATE KEYING	
P	Designates Pin Contacts in Normal Position

Refer to page 12 for alternate rotation letters to use.

5. SHELL FINISH	
1	Hermetic seal, passivated Stainless Steel, 200°C
2	Hermetic seal, Stainless Steel w/Nickel Plate
3	Carbon Steel w/reflowed tin plate

6. TAIL LENGTH	
B	.100±.03
D	.200±.03
F	.300±.03

† Red band indicates fully mated

Shell Size	Part Number	B Thread Class 2A 0.1P-0.3L-TS (Plated)	L +.011 −.005	M +.006 −.005	GG Dia. +.011 −.010	KK Dia +.011 −.005
9	10-626**481**-XXX	.6250	.806	.125	.750	.672
11	**482**-XXX	.7500	.806	.125	.844	.781
13	**483**-XXX	.8750	.806	.125	.969	.906
15	**484**-XXX	1.0000	.806	.125	1.094	1.031
17	**485**-XXX	1.1875	.806	.125	1.218	1.156
19	**486**-XXX	1.2500	.806	.125	1.312	1.250
21	**487**-XXX	1.3750	.806	.125	1.438	1.375
23	**488**-XXX	1.5000	.838	.156	1.563	1.500
25	**489**-XXX	1.6250	.838	.156	1.688	1.625

PCB Hermetic Weld Mounting Receptacle

Commercial

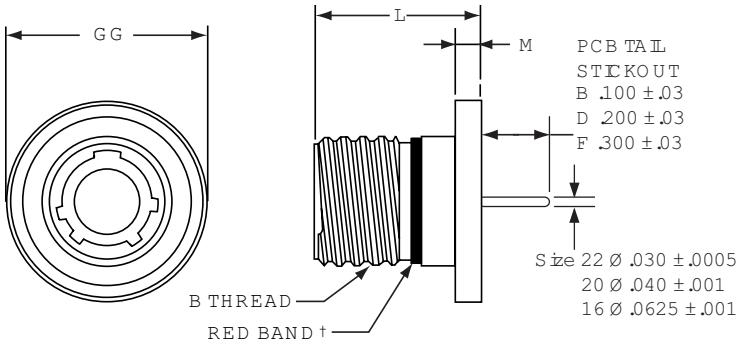

† Red band indicates fully mated

PART # See chart below	1. Base Number	2. Coded Shell Size	3. Insert Arrg.	4. Contact Type/Alt. Keying	5. Shell Finish	6. Tail Length
	10-626	491	-35	P	1	B

HOW TO ORDER

1. BASE NUMBER

10-626	Base Number for MIL-DTL-38999 Series III Hermetic with PCB Tail

2. CODED SHELL SIZE

See chart below **491-499**, designates size **9-25** shell size.

3. INSERT ARRANGEMENT

-35	Designates Insert Arrangement Number

Refer to insert availability chart on page 5-6.

4. CONTACT TYPE/ALTERNATE KEYING

P	Designates Pin Contacts in Normal Position

Refer to page 12 for alternate rotation letters to use.

5. SHELL FINISH

1	Hermetic seal, passivated Stainless Steel, 200°C
2	Hermetic seal, Stainless Steel w/Nickel Plate
3	Carbon Steel w/reflowed tin plate

6. TAIL LENGTH

B	.100±.03
D	.200±.03
F	.300±.03

Shell Size	Part Number	B Thread Class 2A 0.1P-0.3L-TS (Plated)	L +.011 –.000	M +.006 –.005	GG Dia. +.011 –.010
9	10-626491-XXX	.6250	.806	.125	.973
11	492-XXX	.7500	.806	.125	1.095
13	493-XXX	.8750	.806	.125	1.221
15	494-XXX	1.0000	.806	.125	1.347
17	495-XXX	1.1875	.806	.125	1.434
19	496-XXX	1.2500	.806	.125	1.579
21	497-XXX	1.3750	.806	.125	1.721
23	498-XXX	1.5000	.838	.156	1.886
25	499-XXX	1.6250	.838	.156	1.973

* Not available for weld mount. All dimensions for reference only.

Series II

MIL-DTL-38999

Amphenol® JT Series subminiature cylindrical connectors are qualified to MIL-DTL-38999 Series II. These connectors were developed to meet the needs of the aerospace industry, and provided the impetus for development of the MIL-C-38999 specifications, which has been superseded by MIL-DTL-38999.

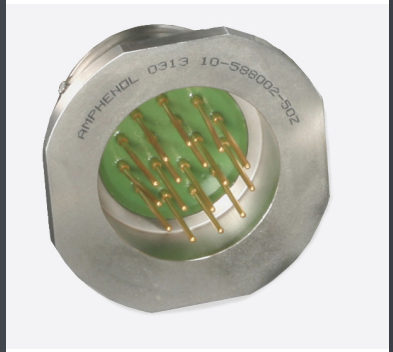

FEATURES:

- Lightweight, Space Saving Design
- Contact Protection - 100% scoop-proof LJT design prevents bent pins and short circuits during mating
- Quick Positive Coupling - 3 point bayonet lock system
- Mismating Eliminated - with 5 key/keyway design
- Error Proof Alternate Positioning - insured by different key/ keyway locations
- Hermetic - air leakage limited to 1 X 10-7 cm3 per second
- Inventory Support Commonality - uses standard MIL-DTL-38999 contacts, insert arrangements and application tools.
- RoHS Compliant Product Available -Consult Amphenol Aerospace Operations.

Military to Commercial Shell Style Conversion Table

How to Order (Military)

MILITARY	DESCRIPTION	COMMERCIAL
MS27475	Hermetic Wall Mounting Receptacle	JT00
MS27476	Hermetic Box Mounting Receptacle	JT02, JTS02
MS27477	Hermetic Jam Nut Receptacle	
MS27478	Hermetic Solder Mounting Receptacle	JTSIY

HOW TO ORDER - MILITARY SERIES II

1. MS Number	2. Service Class	3. Shell Size	4. Finishes	5. Insert Arrangement	6. Contact Style	7. Alternate Keying Position
MS27475	Y	14	A	18	P	A

1. MS NUMBER SERIES II JT	
MS27475	Hermetic Wall Mounting Receptacle
MS27476	Hermetic Box Mounting Receptacle
MS27477	Hermetic Jam Nut Receptacle
MS27478	Hermetic Solder Mounting Receptacle

2. HERMETIC SERVICE CLASS	
Y	Hermetic with interfacial seal

3. SHELL SIZE & 5. INSERT ARRANGEMENT
See table on page 5-6

Shell Size & Insert Arrangement are on pages 5-6. First number represents Shell Size, second number is the Insert Arrangement. Place Shell Size in box 3 and Insert Arrangement in box 5.

4. HERMETIC FINISHES	
Finish	Military Finish Data
Carbon steel shell tin plated & contacts	D
Stainless steel shell passivated	E
Stainless steel nickel plated	N

6. CONTACTS	
P	Pin Contacts - Solder
X	Pin Contacts - Eyelet

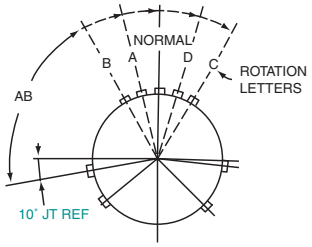

RELATIVE POSSIBLE POSITION OF ROTATED MASTER KEYWAY (front face of receptacle shown)

JT Key/Keyway Rotation

7. ALTERNATE KEYING POSITION
"A" designates Alternate keying connector assembly. Other basic alternate keys are "B", "C" and "D". No letter required for normal rotation (no rotation) position.

AB ANGLE OF ROTATION (Degrees)					
Shell Size	Normal	A	B	C	D
8	100°	82°	-	-	118°
10	100°	86°	72°	128°	114°
12	100°	80°	68°	132°	120°
14	100°	79°	66°	134°	121°
16	100°	82°	70°	130°	118°
18	100°	82°	70°	130°	118°
20	100°	82°	70°	130°	118°
22	100°	85°	74°	126°	115°
24	100°	85°	74°	126°	115°

A plug with a given rotation letter will mate with a receptacle with the same rotation letter. The AB angle for a given connector is the same whether it contains pins or sockets. Only the master key/keyway rotates in the shell, and the minor keys are fixed.

AB angles shown are viewed from the front face of the connector, a receptacle is shown below. The angles for the plug are exactly the same except the direction of rotation is opposite of that shown for the receptacle.

The "N" designation is not referenced in part number, it is omitted.

MIL-DTL-38999/27599, Series II JT

How to Order (Commercial)

1. Type & Style	2. Service Class	3. Shell Size-Insert Arrg.	4. Contact Style	5. Alternate Keying Position	6. Finish Variation Suffix
JT00	Y	9-35	P	A	(SR)

2. HERMETIC SERVICE CLASS

Y	Hermetic with interfacial seal
H	Hermetic applications- Fused compression glass sealed inserts. Leakage rate less than .01 micron cu. ft./hr. (1 x 10-7 cc/sec.) at 15 psi differential.

3. SHELL SIZE & INSERT ARRANGEMENTS

See table on page 5-6. First number represents Shell Size, second number is the Insert Arrangement.

4. CONTACTS

P	Pin Contacts - Solder

5. ALTERNATE KEYING POSITION

"A" designates Alternate keying connector assembly. Other basic alternate keys are "B", "C" and "D". No letter required for normal rotation (no rotation) position.

A plug with a given rotation letter will mate with a receptacle with the same rotation letter. The AB angle for a given connector is the same whether it contains pins or sockets. Only the master key/keyway rotates in the shell, and the minor keys are fixed.

AB angles shown are viewed from the front face of the connector, a receptacle is shown below. The angles for the plug are exactly the same except the direction of rotation is opposite of that shown for the receptacle.

The "N" designation is not referenced in part number, it is omitted.

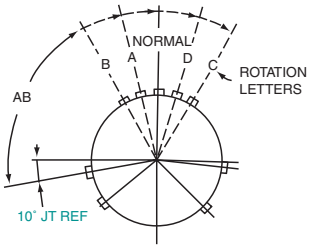

RELATIVE POSSIBLE POSITION OF ROTATED MASTER KEYWAY (front face of receptacle shown)

JT Key/Keyway Rotation

AB ANGLE OF ROTATION (Degrees)					
Shell Size	Normal	A	B	C	D
8	100°	82°	-	-	118°
10	100°	86°	72°	128°	114°
12	100°	80°	68°	132°	120°
14	100°	79°	66°	134°	121°
16	100°	82°	70°	130°	118°
18	100°	82°	70°	130°	118°
20	100°	82°	70°	130°	118°
22	100°	85°	74°	126°	115°
24	100°	85°	74°	126°	115°

6. HERMETIC FINISHES

Finish	Finish Suffix
Carbon steel shell tin plated & contacts	(468)
Stainless steel shell passivated	(162)
Stainless steel nickel plated	( )

Wall Mounting Receptacle -Hermetic

Military (MS27475 & MS27482), Commercial (JT00 & JTS00)

PART NUMBER BUILDER Page 22-23

MILITARY	COMMERCIAL
MS27475Y	JT00H, JT00Y
MS27482Y	JTS00Y

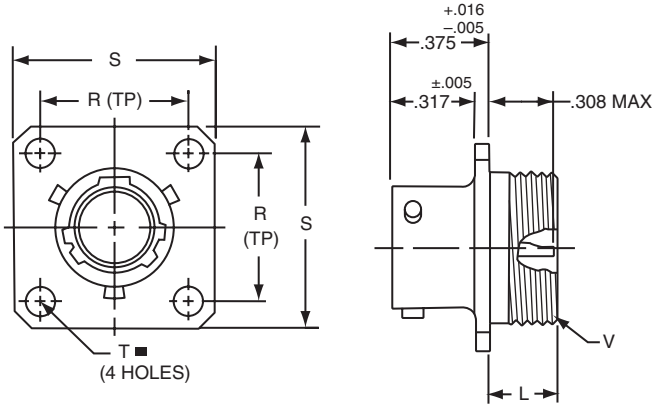

■ ⊖ .005 DIA Ⓜ

Shell Size	L Max.	N +.001 –.005	R (TP)	S ±.016	T ±.005	V Thread Class 2A
8	.234	.473	.594	.812	.120	.5625-24UNEF
10	.234	.590	.719	.938	.120	.6875-24UNEF
12	.234	.750	.812	1.031	.120	.8125-20UNEF
14	.234	.875	.906	1.125	.120	.9375-20UNEF
16	.234	1.000	.969	1.219	.120	1.0625-18UNEF
18	.234	1.125	1.062	1.312	.120	1.1875-18UNEF
20	.234	1.250	1.156	1.438	.120	1.3125-18UNEF
22	.234	1.375	1.250	1.562	.120	1.4375-18UNEF
24	.313	1.500	1.375	1.688	.147	1.5625-18UNEF

COMMERCIAL	MILITARY
* JT00H-XX-XXX	
** JT00Y-XX-XXX	MS27475YXXDXXX
*** JTS00Y-XX-XXX	MS27482YXXEXXX

* Standard Junior Tri-Lock
** Interfacial seal wafer
*** High temperature version, interfacial seal wafer with stainless steel shell

Box Mounting Receptacle - Hermetic

Military (MS27476), Commercial (JT02 & JTS02)

PART NUMBER BUILDER Page 22-23

MILITARY	COMMERCIAL
MS27476Y	JT02H, JT02Y
	JTS02Y

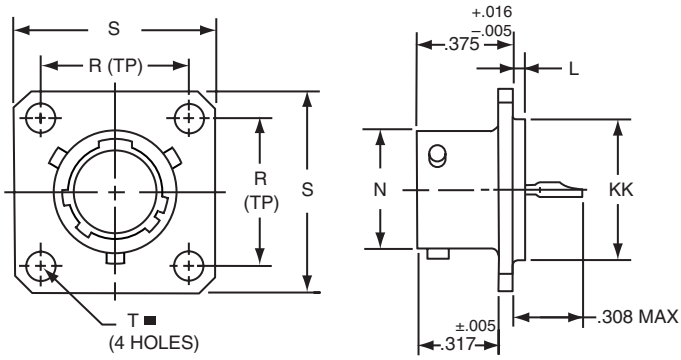

■ ⊕ .005 DIA Ⓜ

Shell Size	L +.006 –.015	N +.001 –.005	R (TP)	S ±.016	T ±.005	KK +.001 –.005
8	.051	.473	.594	.812	.120	.562
10	.051	.590	.719	.938	.120	.672
12	.051	.750	.812	1.031	.120	.781
14	.051	.875	.906	1.125	.120	.906
16	.051	1.000	.969	1.219	.120	1.031
18	.051	1.125	1.062	1.312	.120	1.156
20	.051	1.250	1.156	1.438	.120	1.250
22	.080	1.375	1.250	1.562	.120	1.375
24	.080	1.500	1.375	1.688	.147	1.500

COMMERCIAL	MILITARY
*JT02H-XX-XXX	
** JT02Y-XX-XXX	MS27476YXXDXXX
*** JTS02Y-XX-XXX	MS27476YXXEXXX

* Standard Junior Tri-Lock
** Interfacial seal wafer
*** High temperature version, interfacial seal wafer with stainless steel shell

All dimensions for reference only.

Jam Nut Receptacle - Hermetic

Military (MS27477 & MS27483), Commercial (JT07 & JTS07)

Amphenol Aerospace

PART NUMBER BUILDER Page 22-23

MILITARY	COMMERCIAL
MS27477Y	JT07H, JT07Y
MS27483Y	JTS07Y

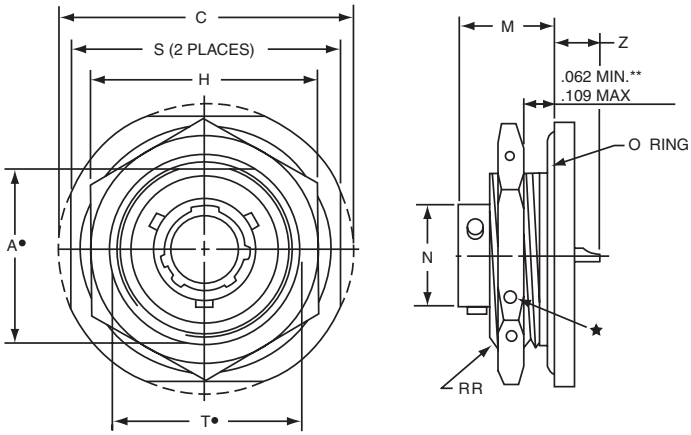

* Standard Junior Tri-Lock
H .059 Dia. Min. 3 lockwire holes. Formed lockwire hole design (6 holes) is optional.
\+ "D" shaped mounting hole dimensions.
** Panel Thickness
*** Interfacial seal wafer
**** High temperature version, interfacial seal wafer with stainless steel shell

COMMERCIAL	MILITARY
* JT07H-XX-XXX	
*** JT07Y-XX-XX	MS27477YXXDXXX
**** JTS07Y-XX-XXX	MS27483YXXEXXX

Shell Size	A+ +.000 –.010	C Max.	H +.017 –.016	M ±.005	N +.001 –.005	S ±.016	T+ +.010 –.000	Z Max.	RR Thread Class 2A
8	.830	1.390	1.062	.438	.473	1.250	.884	.244	.8750-20UNEF
10	.955	1.515	1.188	.438	.590	1.375	1.007	.244	1.0000-20UNEF
12	1.084	1.640	1.312	.438	.750	1.500	1.134	.244	1.1250-18UNEF
14	1.208	1.765	1.438	.438	.875	1.625	1.259	.244	1.2500-18UNEF
16	1.333	1.953	1.562	.438	1.000	1.781	1.384	.244	1.3750-18UNEF
18	1.459	2.031	1.688	.438	1.125	1.890	1.507	.244	1.5000-18UNEF
20	1.576	2.156	1.812	.464	1.250	2.016	1.634	.218	1.6250-18UNEF
22	1.701	2.280	2.000	.464	1.375	2.140	1.759	.218	1.7500-18UNS
24	1.826	2.405	2.125	.464	1.500	2.265	1.884	.218	1.8750-16UN

Solder Mounting Receptacle - Hermetic

Military (MS27478 & MS27503), Commercial (JTI & JTSI)

PART NUMBER BUILDER Page 22-23

MILITARY	COMMERCIAL
MS27478Y	JTIH, JTIY
MS27503Y	JTSIY

COMMERCIAL	MILITARY
* JTIH-XX-XXX	
** JTIY-XX-XX	MS27478YXXDXXX
*** JTSIY-XX-XXX	MS27503YXXEXXX

Shell Size	L +.011 –.010	N +.001 –.005	GG +.011 –.010	KK +.001 –.005
8	.078	.473	.687	.562
10	.078	.590	.797	.672
12	.078	.750	.906	.781
14	.078	.875	1.031	.906
16	.078	1.000	1.156	1.031
18	.078	1.125	1.281	1.156
20	.078	1.250	1.375	1.250
22	.107	1.375	1.500	1.375
24	.107	1.500	1.625	1.500

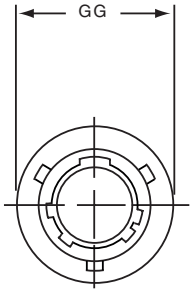

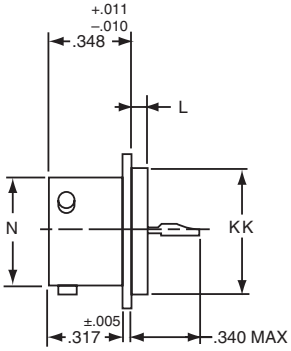

* Standard Junior Tri-Lock
** Interfacial seal wafer
*** High temperature version, interfacial seal wafer with stainless steel shell

All dimensions for reference only. Weld mounting hermetic receptacle also available. Consult Amphenol Aerospace for availability and dimensions.

PCB Wall Mounting Receptacle Hermetic

Commercial (JT00)

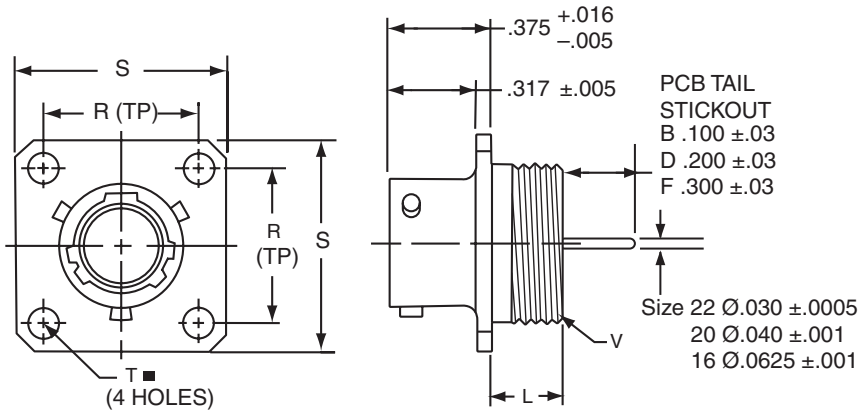

PART # See chart below	1. Base Number	2. Coded Shell Size	3. Insert Arrg.	4. Contact Type/ Alt. Keying Position	5. Shell Finish	6. Tail Length
	10-626	431	-35	P	1	B

HOW TO ORDER

1. BASE NUMBER	
10-626	Base Number for MIL-DTL-38999 Series II Hermetic with PCB Tail

2. CODED SHELL SIZE
See chart below **431-439**, designates size 9-25 shell size. Example: **431** = Size 9 Shell

3. INSERT ARRANGEMENT	
-35	Insert Arrangement Number. Refer to insert availability chart on page 5-6.

4. CONTACT TYPE/ALTERNATE KEYING	
P	Designates Pin Contacts in Normal Position. Refer to page 22 for alternate rotation letters to use.

5. SHELL FINISH	
1	Hermetic seal, passivated Stainless Steel, 200°C
2	Hermetic seal, Stainless Steel w/Nickel Plate
3	Carbon Steel w/reflowed tin plate

6. TAIL LENGTH	
B	.100±.03
D	.200±.03
F	.300±.03

■ ⊕ .005 DIA Ⓜ

Shell Size	Part Number	L Max.	N +.001 –.005	R (TP)	S ±.016	T ±.005	V Thread Class 2A
8	10-626**431**-XXX	.234	.473	.594	.812	.120	.5625-24UNEF
10	**432**-XXX	.234	.590	.719	.938	.120	.6875-24UNEF
12	**433**-XXX	.234	.750	.812	1.031	.120	.8125-20UNEF
14	**434**-XXX	.234	.875	.906	1.125	.120	.9375-20UNEF
16	**435**-XXX	.234	1.000	.969	1.219	.120	1.0625-18UNEF
18	**436**-XXX	.234	1.125	1.062	1.312	.120	1.1875-18UNEF
20	**437**-XXX	.234	1.250	1.156	1.438	.120	1.3125-18UNEF
22	**438**-XXX	.234	1.375	1.250	1.562	.120	1.4375-18UNEF
24	**439**-XXX	.313	1.500	1.375	1.688	.147	1.5625-18UNEF

PCB Box Mounting Receptacle Hermetic

Commercial JT02

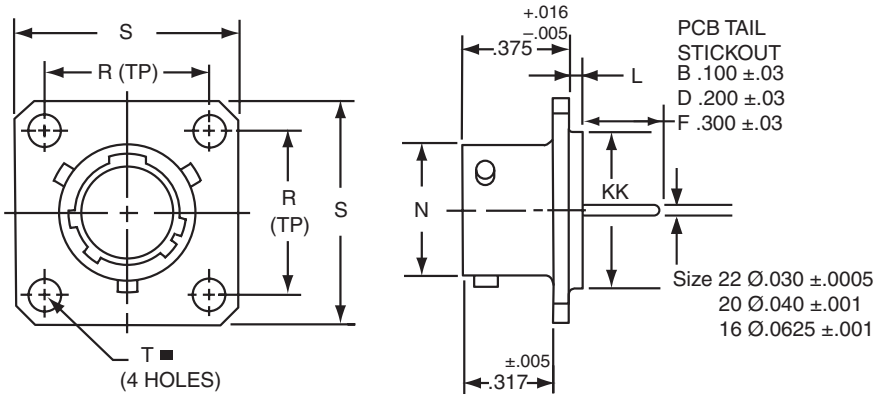

PART # See chart below	1. Base Number	2. Coded Shell Size	3. Insert Arrg.	4. Contact Type/ Alt. Keying Position	5. Shell Finish	6. Tail Length
	10-626	461	-35	P	1	B

HOW TO ORDER

1. BASE NUMBER	
10-626	Base Number for MIL-DTL-38999 Series II Hermetic with PCB Tail

2. CODED SHELL SIZE
See chart below **461-469**, designates size 9-25 shell size. Example: **461** = Size 9 Shell

3. INSERT ARRANGEMENT	
-35	Insert Arrangement Number. Refer to insert availability chart on page 5-6.

4. CONTACT TYPE/ALTERNATE KEYING	
P	Designates Pin Contacts in Normal Position. Refer to page 22 for alternate rotation letters to use.

5. SHELL FINISH	
1	Hermetic seal, passivated Stainless Steel, 200°C
2	Hermetic seal, Stainless Steel w/Nickel Plate
3	Carbon Steel w/reflowed tin plate

6. TAIL LENGTH	
B	.100±.03
D	.200±.03
F	.300±.03

■ ⊕ .005 DIA Ⓜ

Shell Size	Part Number	L +.006 –.015	N +.001 –.005	R (TP)	S ±.016	T ±.005	KK +.001 –.005
8	10-626**461**-XXX	.051	.473	.594	.812	.120	.562
10	**462**-XXX	.051	.590	.719	.938	.120	.672
12	**463**-XXX	.051	.750	.812	1.031	.120	.781
14	**464**-XXX	.051	.875	.906	1.125	.120	.906
16	**465**-XXX	.051	1.000	.969	1.219	.120	1.031
18	**466**-XXX	.051	1.125	1.062	1.312	.120	1.156
20	**467**-XXX	.051	1.250	1.156	1.438	.120	1.250
22	**468**-XXX	.080	1.375	1.250	1.562	.120	1.375
24	**469**-XXX	.080	1.500	1.375	1.688	.147	1.500

All dimensions for reference only.

PCB Jam Nut Receptacle Hermetic

Commercial (JT07)

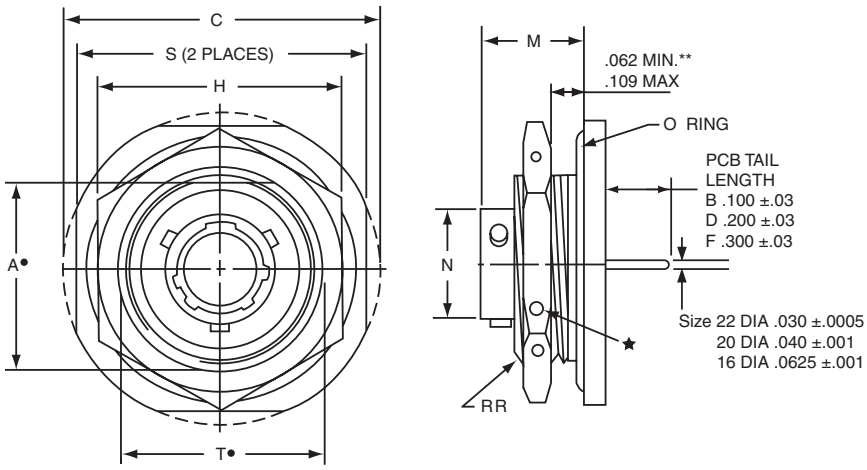

PART # See chart below	1. Base Number	2. Coded Shell Size	3. Insert Arrg.	4. Contact Type/ Alt. Keying Position	5. Shell Finish	6. Tail Length
	10-626	441	-35	P	1	B

HOW TO ORDER

1. BASE NUMBER	
10-626	Base Number for MIL-DTL-38999 Series II Hermetic with PCB Tail

2. CODED SHELL SIZE
See chart below **441-449**, designates size 9-25 shell size. Example: **441** = Size 9 Shell

3. INSERT ARRANGEMENT	
-35	Designates Insert Arrangement Number. Refer to insert availability chart on page 5-6.

4. CONTACT TYPE/ALTERNATE KEYING	
P	Designates Pin Contacts in Normal Position. Refer to page 22 for alternate rotation letters to use.

5. SHELL FINISH	
1	Hermetic seal, passivated Stainless Steel, 200°C
2	Hermetic seal, Stainless Steel w/Nickel Plate
3	Carbon Steel w/reflowed tin plate

6. TAIL LENGTH	
B	.100±.03
D	.200±.03
F	.300±.03

Shell Size	Part Number	A+ +.000 –.010	C Max.	H +.017 –.016	M ±.005	N +.001 –.005	S ±.016	T+ +.010 –.000	RR Thread Class 2A
8	10-626**441**-XXX	.830	1.390	1.062	.438	.473	1.250	.884	.8750-20UNEF
10	**442**-XXX	.955	1.515	1.188	.438	.590	1.375	1.007	1.0000-20UNEF
12	**443**-XXX	1.084	1.640	1.312	.438	.750	1.500	1.134	1.1250-18UNEF
14	**444**-XXX	1.208	1.765	1.438	.438	.875	1.625	1.259	1.2500-18UNEF
16	**445**-XXX	1.333	1.953	1.562	.438	1.000	1.781	1.384	1.3750-18UNEF
18	**446**-XXX	1.459	2.031	1.688	.438	1.125	1.890	1.507	1.5000-18UNEF
20	**447**-XXX	1.576	2.156	1.812	.464	1.250	2.016	1.634	1.6250-18UNEF
22	**448**-XXX	1.701	2.280	2.000	.464	1.375	2.140	1.759	1.7500-18UNS
24	**449**-XXX	1.826	2.405	2.125	.464	1.500	2.265	1.884	1.8750-16UN

H .059 Dia. Min. 3 lockwire holes. Formed lockwire hole design (6 holes) is optional.

+ "D" shaped mounting hole dimensions.

** Panel Thickness

All dimensions for reference only.

PCB Solder Mounting Receptacle Hermetic

Commercial (JTI)

Amphenol Aerospace

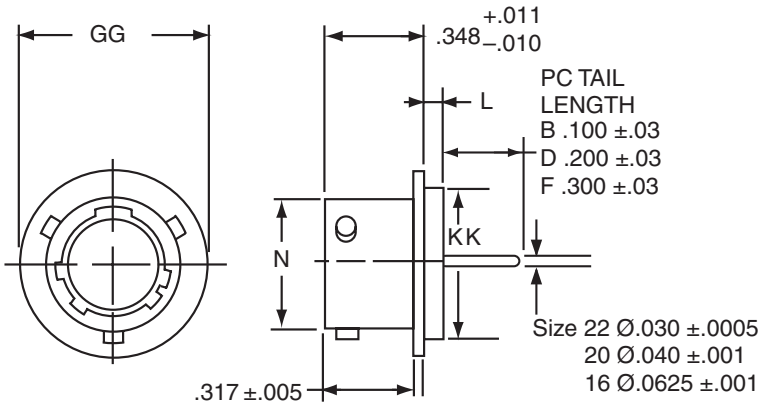

	1.	2.	3.	4.	5.	6.
PART # See chart below	Base Number	Coded Shell Size	Insert Arrg.	Contact Type/ Alt. Keying Position	Shell Finish	Tail Length
	10-626	451	-35	P	1	B

HOW TO ORDER

1. BASE NUMBER	
10-626	Base Number for MIL-DTL-38999 Series II Hermetic with PCB Tail

2. CODED SHELL SIZE
See chart below **451-459**, designates size 9-25 shell size. Example: **451** = Size 9 Shell

3. INSERT ARRANGEMENT	
-35	Insert Arrangement Number. Refer to insert availability chart on page 5-6.

4. CONTACT TYPE/ALTERNATE KEYING	
P	Designates Pin Contacts in Normal Position. Refer to page 22 for alternate rotation letters to use.

5. SHELL FINISH	
1	Hermetic seal, passivated Stainless Steel, 200°C
2	Hermetic seal, Stainless Steel w/Nickel Plate
3	Carbon Steel w/reflowed tin plate

6. TAIL LENGTH	
B	.100±.03
D	.200±.03
F	.300±.03

Shell Size	Part Number	L +.011 –.010	N +.001 –.005	GG +.011 –.010	KK +.001 –.005
8	10-626**451**-XXX	.078	.473	.687	.562
10	**452**-XXX	.078	.590	.797	.672
12	**453**-XXX	.078	.750	.906	.781
14	**454**-XXX	.078	.875	1.031	.906
16	**455**-XXX	.078	1.000	1.156	1.031
18	**456**-XXX	.078	1.125	1.281	1.156
20	**457**-XXX	.078	1.250	1.375	1.250
22	**458**-XXX	.107	1.375	1.500	1.375
24	**459**-XXX	.107	1.500	1.625	1.500

All dimensions for reference only.
Weld mounting hermetic receptacle also available.
Consult Amphenol Aerospace for availability and dimensions.

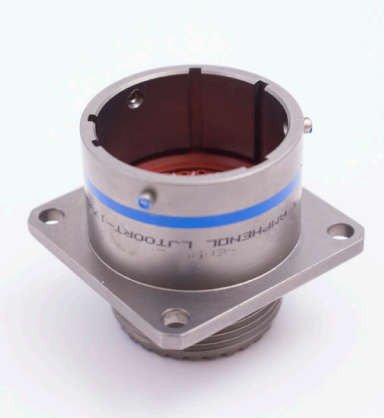

Series I
MIL-DTL-38999

Amphenol® LJT Series subminiature cylindrical connectors are qualified to MIL-DTL-38999 Series I. These connectors were developed to meet the needs of the aerospace industry, and provided the impetus for development of the MIL-C-38999 specifications, which has been superseded by MIL-DTL-38999.

FEATURES:

- **Lightweight, Space Saving Design**
- **Contact Protection**
  100% scoop-proof LJT design prevents bent pins and short circuits during mating
- **Quick Positive Coupling**
  3 point bayonet lock system
- **Mismating Eliminated**
  With 5 key/keyway design
- **Error Proof Alternate Positioning**
  insured by different key/keyway locations
- **Fixed Solder Contacts**
  Amphenol MIL-DTL-38999 Series I LJT are available in solder versions as both Commercial and Military qualified to MIL-DTL-27599
- **Hermetic**
  Air leakage limited to 1 X 10-7 cm3 per second
- **Inventory Support Commonality**
  Uses standard MIL-DTL-38999 contacts, insert arrangements and application tools.
- **RoHS Compliant Product Available**
  Consult Amphenol Aerospace Operations.

Military to Commercial Shell Style Conversion Table

How to Order (Military)

Amphenol Aerospace

MILITARY	DESCRIPTION	COMMERCIAL
MS27469	Hermetic Wall Mounting Receptacle	LJT00, LJTS00
MS27470	Hermetic Jam Nut Receptacle	LJT07, LJTS07
MS27471	Hermetic Solder Mounting Receptacle	LJTIH, LJTIY, LJTSIY

HOW TO ORDER - Military Series I

1. MS Number	2. Service Class	3. Shell Size	4. Finishes	5. Insert Arrangement	6. Contact Style	7. Alternate Keying Position
MS27469	Y	14	N	18	P	A

1. MS NUMBER SERIES I LJT

MS27469	Hermetic Wall Mounting Receptacle
MS27470	Hermetic Jam Nut Receptacle
MS27471	Hermetic Solder Mounting Receptacle

2. HERMETIC SERVICE CLASS

Y	Hermetic with interfacial seal

3. SHELL SIZE

See table on page 5-6

Shell Size & Insert Arrangement are on pages 5-6. First number represents Shell Size, second number is the Insert Arrangement. Place Shell Size in box 3 and Insert Arrangement in box 5.

4. HERMETIC FINISHES

Finish	Military Finish Data
Carbon steel shell tin plated & contacts	D
Stainless steel shell passivated	E
Stainless steel nickel plated	N

5. INSERT ARRANGEMENT

See table on page 5-6

6. CONTACTS

P	Pin Contacts-Solder
X	Pin Contacts - Eyelet

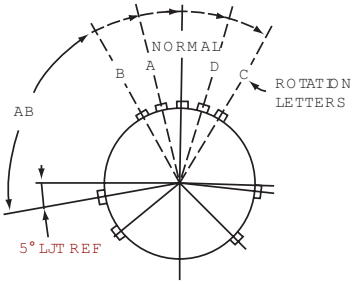

RELATIVE POSSIBLE POSITION OF ROTATED MASTER KEYWAY (front face of receptacle shown)

7. ALTERNATE KEYING POSITION

"A" designates Alternate keying connector assembly. Other basic alternate keys are "B", "C" and "D". No letter required for normal rotation (no rotation) position.

A plug with a given rotation letter will mate with a receptacle with the same rotation letter. The AB angle for a given connector is the same whether it contains pins or sockets. Only the master key/keyway rotates in the shell, and the minor keys are fixed. AB angles shown are viewed from the front face of the connector, a receptacle is shown below. The angles for the plug are exactly the same except the direction of rotation is opposite of that shown for the receptacle.

The "N" designation is not referenced in part number, it is omitted.

LJT Key/Keyway Rotation

AB ANGLE OF ROTATION (Degrees)					
Shell Size	Normal	A	B	C	D
9	95°	77°	-	-	113°
11	95°	81°	67°	123°	109°
13	95°	75°	63°	127°	115°
15	95°	74°	61°	129°	116°
17	95°	77°	65°	125°	113°
19	95°	77°	65°	125°	113°
21	95°	77°	65°	125°	113°
23	95°	80°	69°	121°	110°
25	95°	80°	69°	121°	110°

MIL-DTL-38999/ 27599, Series I LJT

How to Order (Commercial)

1. Table & Style	2. Service Class	3. Shell Size -Insert Arrg.	4. Contact Style	5. Alternate Keying Position	6. Finish Variation Suffix**
LJT00	Y	9-35	P	B	(162)

** If Required

1. SERIES AND STYLE

		Long Junior Tri-Lock	High Temperature	Chemical and Fuel Resistant
Hermetic	Wall Mounting Receptacle	LJT00	LJTS00	LJTN00
	Jam Nut Receptacle	LJT07	LJTS07	LJTN07
	Solder Mounting Receptacle	LJTI	LJTSI	LJTNI

2. SERVICE CLASS HERMETIC

Y	Same as "H" with interfacial seal.
H	Hermetic applications- Fused compression glass sealed inserts. Leakage rate less than .01 micron cu. ft./hr. (1 x 10-7 cc/sec.) at 15 psi differential.

3. SHELL SIZE & INSERT ARRANGEMENTS

See table on page 5-6

First number represents Shell Size, second number is the Insert Arrangement.

4. CONTACTS

P	Pin Contacts - Solder

5. ALTERNATE KEYING POSITION

"A" designates Alternate keying connector assembly. Other basic alternate keys are "B", "C" and "D". No letter required for normal rotation (no rotation) position.

A plug with a given rotation letter will mate with a receptacle with the same rotation letter. The AB angle for a given connector is the same whether it contains pins or sockets. Only the master key/ keyway rotates in the shell, and the minor keys are fixed.

AB angles shown are viewed from the front face of the connector, a receptacle is shown below. The angles for the plug are exactly the same except the direction of rotation is opposite of that shown for the receptacle.

The "N" designation is not referenced in part number, it is omitted.

6. Hermetic FINISHES

Finish	Finish Suffix
Carbon steel shell tin plated & contacts	(468)
Stainless steel shell passivated	(162)
Stainless steel nickel plated	( )

LJT Key/Keyway Rotation

AB ANGLE OF ROTATION (Degrees)					
Shell Size	Normal	A	B	C	D
9	95°	77°	-	-	113°
11	95°	81°	67°	123°	109°
13	95°	75°	63°	127°	115°
15	95°	74°	61°	129°	116°
17	95°	77°	65°	125°	113°
19	95°	77°	65°	125°	113°
21	95°	77°	65°	125°	113°
23	95°	80°	69°	121°	110°
25	95°	80°	69°	121°	110°

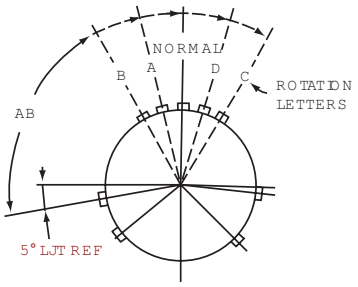

RELATIVE POSSIBLE POSITION OF ROTATED MASTER KEYWAY (front face of receptacle shown)

Wall Mounting Receptacle - Hermetic

Military (MS27469), Commercial (LJT00)

Amphenol Aerospace

PART NUMBER BUILDER Page 31-32

MILITARY	COMMERCIAL
MS27469Y	LJT00H, LJT00Y LJTS00Y

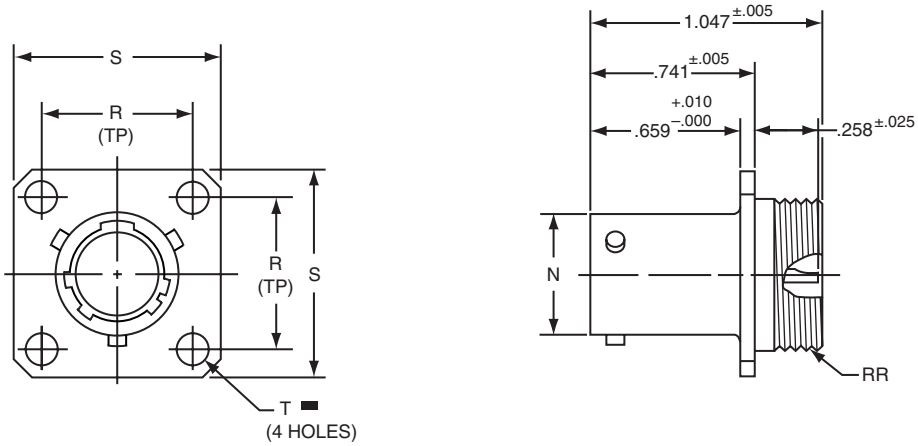

COMMERCIAL	MILITARY
* LJT00H-XX-XXX	
** LJT00Y-XX-XXX	MS27469YXXD
*** LJTS00Y-XX-XXX	MS27469YXXE

▬ ⊕ .005 DIA Ⓜ

* Long Junior Tri-Lock
** Interfacial seal wafer
*** High temperature version, interfacial seal wafer with stainless steel shell

Shell Size	N Dia. +.001 −.005	R (TP)	S ±.016	T Dia. ±.005	RR Thread Class 2A
9	.572	.719	.938	.128	.6875-24 UNEF
11	.700	.812	1.031	.128	.8125-20 UNEF
13	.850	.906	1.125	.128	.9375-20 UNEF
15	.975	.969	1.219	.128	1.0625-18 UNEF
17	1.100	1.062	1.312	.128	1.1875-18 UNEF
19	1.207	1.156	1.438	.128	1.3125-18 UNEF
21	1.332	1.250	1.562	.128	1.4375-18 UNEF
23	1.457	1.375	1.688	.147	1.5625-18 UNEF
25	1.582	1.500	1.812	.147	1.6875-18 UNEF

All dimensions for reference only.

Jam Nut Receptacle - Hermetic

Military (MS27470) Commercial (LJT07 & LJTS07)

PART NUMBER BUILDER Page 31-32

MILITARY	COMMERCIAL
MS27470Y	LJT07H, LJT07Y LJTS07Y

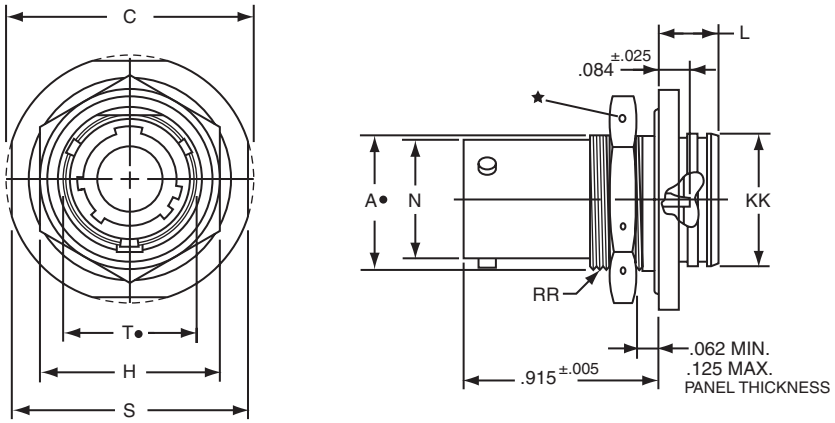

COMMERCIAL	MILITARY
* LJT07H-XX-XXX	
** LJT07Y-XX-XXX	MS27470YXXD
*** LJTS07Y-XX-XXX	MS27470YXXE

H	.059 Dia. Min. 3 lockwire holes. Formed lockwire hole design (6 holes) is optional.
+	"D" shaped mounting hole dimensions.
*	*Long Junior Tri-Lock
**	Interfacial seal wafer
***	High temperature version, interfacial seal wafer with stainless steel shell

Shell Size	A+ +.000 –.010	C Max.	H Hex +.017 –.016	L Max.	N +.000 –.005	S ±.016	T+ +.010 –.000	KK +.011 –.000	RR Thread Class 2A (Plated)
9	.669	1.199	.875	.297	.572	1.062	.697	.642	.6875-24 UNEF
11	.769	1.386	1.000	.297	.700	1.250	.822	.766	.8125-20 UNEF
13	.955	1.511	1.188	.297	.850	1.375	1.007	.892	1.0000-20 UNEF
15	1.084	1.636	1.312	.297	.975	1.500	1.134	1.018	1.1250-18 UNEF
17	1.208	1.761	1.438	.297	1.100	1.625	1.259	1.142	1.2500-18 UNEF
19	1.333	1.949	1.562	.328	1.207	1.812	1.384	1.268	1.3750-18 UNEF
21	1.459	2.073	1.688	.328	1.332	1.938	1.507	1.392	1.5000-18 UNEF
23	1.580	2.199	1.812	.328	1.457	2.062	1.634	1.518	1.6250-18 UNEF
25	1.709	2.328	2.000	.328	1.582	2.188	1.759	1.642	1.7500-18 UNS

All dimensions for reference only.

Solder Mounting Receptacle - Hermetic

Military (MS27471), Commercial (LJTI & LJTSI)

Amphenol Aerospace

PART NUMBER BUILDER Page 31-32

MILITARY	COMMERCIAL
MS27471Y	LJTIH, LJTIY LJTSIY

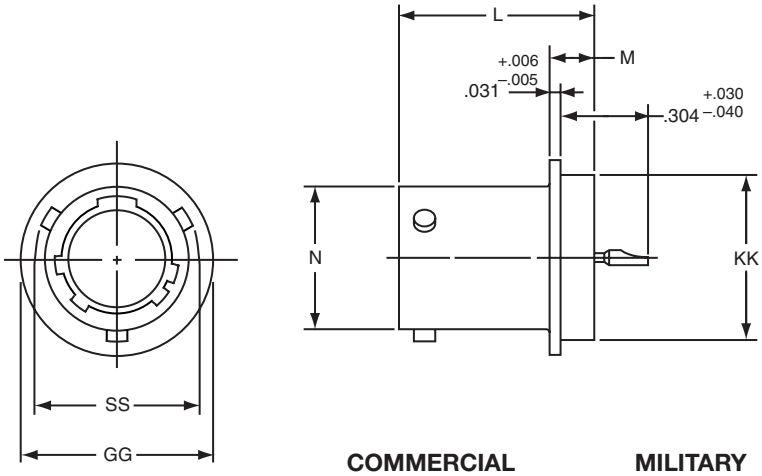

COMMERCIAL	MILITARY
* LJTIH-XX-XXX	
** LJTIY-XX-XXX	MS27471YXXD
*** LJTSIY-XX-XXX	MS27471YXXE

* Long Junior Tri-Lock
** Interfacial seal wafer
*** High temperature version, interfacial seal wafer with stainless steel shell

Shell Size	N Dia. +.001 –.005	SS Dia. +.000 –.016	L +.011 –.000	M +.006 –.005	GG Dia. +.011 –.010	KK Dia. +.001 –.005
9	.572	.662	.789	.125	.750	.672
11	.700	.810	.789	.125	.844	.781
13	.850	.960	.789	.125	.969	.906
15	.975	1.085	.789	.125	1.094	1.031
17	1.100	1.210	.789	.125	1.218	1.156
19	1.207	1.317	.789	.125	1.312	1.250
21	1.332	1.442	.789	.125	1.438	1.375
23	1.457	1.567	.821	.156	1.563	1.500
25	1.582	1.692	.821	.156	1.688	1.625

All dimensions for reference only. Weld mounting hermetic receptacle also available.
Consult Amphenol Aerospace for availability and dimensions.

PCB Hermetic Wall Mounting Receptacle

Commercial (LJT00)

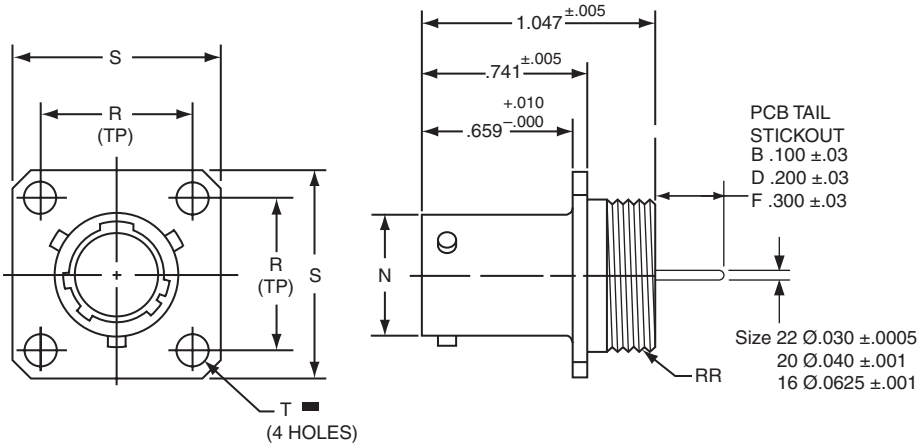

PART # See chart below	1. Base Number	2. Coded Shell Size	3. Insert Arrg.	4. Contact Type/ Alt. Keying Position	5. Shell Finish	6. Tail Length
	10-626	401	-35	P	1	B

HOW TO ORDER

1. BASE NUMBER

10-626	Base Number for MIL-DTL-38999 Series III Hermetic with PCB Tail

2. CODED SHELL SIZE

See chart below **401-409**, designates size 9-25 shell size. Example: **401** = Size 9 Shell

3. INSERT ARRANGEMENT

-35	Designates Insert Arrangement Number. Refer to insert availability chart on page 5-6.

4. CONTACT TYPE/ALTERNATE KEYING

P	Designates Pin Contacts in Normal Position. Refer to page 31 for alternate rotation letters to use.

5. SHELL FINISH

1	Hermetic seal, passivated Stainless Steel, 200°C
2	Hermetic seal, Stainless Steel w/Nickel Plate
3	Carbon Steel w/reflowed tin plate

6. TAIL LENGTH

B	.100±.03
D	.200±.03
F	.300±.03

All dimensions for reference only.

▬ ⊕ .005 DIA Ⓜ

Shell Size	Part Number	N Dia. +.001 −.005	R TP)	S ±.016	T Dia. ±.005	RR Thread Class 2A
9	10-626**401**-XXX	.572	.719	.938	.128	.6875-24 UNEF
11	**402**-XXX	.700	.812	1.031	.128	.8125-20 UNEF
13	**403**-XXX	.850	.906	1.125	.128	.9375-20 UNEF
15	**404**-XXX	.975	.969	1.219	.128	1.0625-18 UNEF
17	**405**-XXX	1.100	1.062	1.312	.128	1.1875-18 UNEF
19	**406**-XXX	1.207	1.156	1.438	.128	1.3125-18 UNEF
21	**407**-XXX	1.332	1.250	1.562	.128	1.4375-18 UNEF
23	**408**-XXX	1.457	1.375	1.688	.147	1.5625-18 UNEF
25	**409**-XXX	1.582	1.500	1.812	.147	1.6875-18 UNEF

PCB Hermetic Jam Nut Receptacle

Amphenol Aerospace

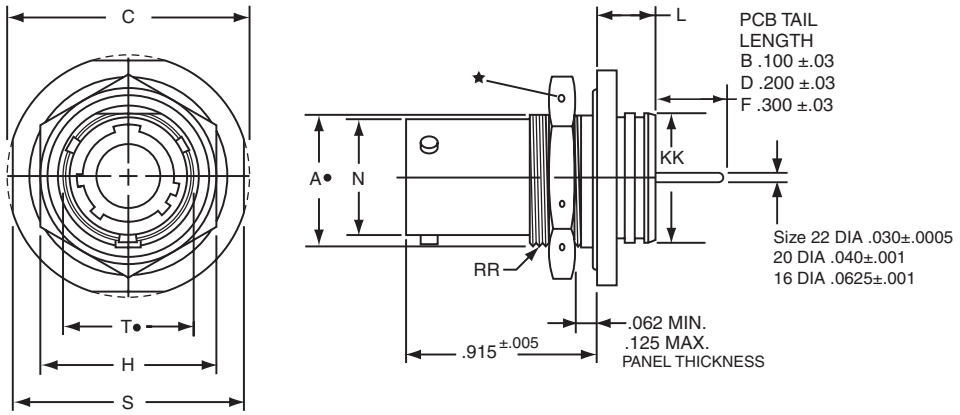

PART # See chart below	1. Base Number	2. Coded Shell Size	3. Insert Arrg.	4. Contact Type/ Alt. Keying Position	5. Shell Finish	6. Tail Length
	10-626	411	-35	P	1	B

HOW TO ORDER

1. BASE NUMBER	
10-626	Base Number for MIL-DTL-38999 Series III Hermetic with PCB Tail

2. CODED SHELL SIZE
See chart below **411-419**, designates size 9-25 shell size. Example: **411** = Size 9 Shell

3. INSERT ARRANGEMENT	
-35	Designates Insert Arrangement Number. Refer to insert availability chart on page 5-6.

4. CONTACT TYPE/ALTERNATE KEYING	
P	Designates Pin Contacts in Normal Position. Refer to page 31 for alternate rotation letters to use.

5. SHELL FINISH	
1	Hermetic seal, passivated Stainless Steel, 200°C
2	Hermetic seal, Stainless Steel w/Nickel Plate
3	Carbon Steel w/reflowed tin plate

6. TAIL LENGTH	
B	.100±.03
D	.200±.03
F	.300±.03

Shell Size	Part Number	A+ +.000 –.010	C Max.	H Hex +.017 –.016	L Max.	N +.000 –.005	S ±.016	T+ +.010 –.000	KK +.011 –.000	RR Thread Class 2A (Plated)
9	10-626**411**-XXX	.669	1.199	.875	.297	.572	1.062	.697	.642	.6875-24 UNEF
11	**412**-XXX	.769	1.386	1.000	.297	.700	1.250	.822	.766	.8125-20 UNEF
13	**413**-XXX	.955	1.511	1.188	.297	.850	1.375	1.007	.892	1.0000-20 UNEF
15	**414**-XXX	1.084	1.636	1.312	.297	.975	1.500	1.134	1.018	1.1250-18 UNEF
17	**415**-XXX	1.208	1.761	1.438	.297	1.100	1.625	1.259	1.142	1.2500-18 UNEF
19	**416**-XXX	1.333	1.949	1.562	.328	1.207	1.812	1.384	1.268	1.3750-18 UNEF
21	**417**-XXX	1.459	2.073	1.688	.328	1.332	1.938	1.507	1.392	1.5000-18 UNEF
23	**418**-XXX	1.580	2.199	1.812	.328	1.457	2.062	1.634	1.518	1.6250-18 UNEF
25	**419**-XXX	1.709	2.328	2.000	.328	1.582	2.188	1.759	1.642	1.7500-18 UNS

All dimensions for reference only.
Weld mounting hermetic receptacle also available.
Consult Amphenol for availability and dimensions.

All dimensions for reference only.

PCB Hermetic Solder Mounting Receptacle

Commercial (LJTI)

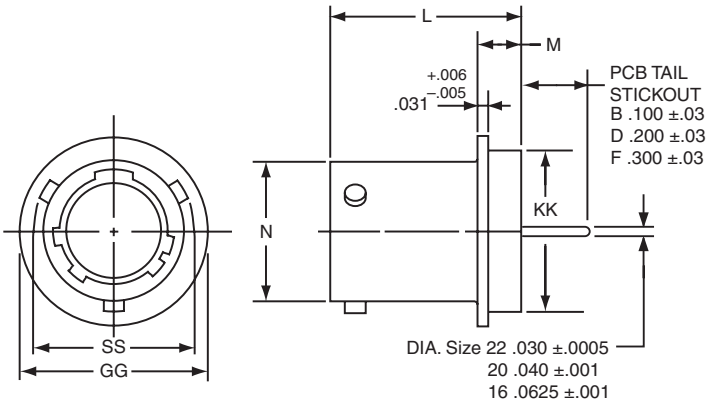

PART # See chart below	1. Base Number	2. Coded Shell Size	3. Insert Arrg.	4. Contact Type/ Alt. Keying Position	5. Shell Finish	6. Tail Length
	10-626	421	-35	P	1	B

HOW TO ORDER

1. BASE NUMBER	
10-626	Base Number for MIL-DTL-38999 Series III Hermetic with PCB Tail

2. CODED SHELL SIZE
See chart below **421-429**, designates size 9-25 shell size. Example: **421** = Size 9 Shell

3. INSERT ARRANGEMENT	
-35	Designates Insert Arrangement Number. Refer to insert availability chart on page 5-6.

4. CONTACT TYPE/ALTERNATE KEYING	
P	Designates Pin Contacts in Normal Position. Refer to page 31 for alternate rotation letters to use.

5. SHELL FINISH	
1	Hermetic seal, passivated Stainless Steel, 200°C
2	Hermetic seal, Stainless Steel w/Nickel Plate
3	Carbon Steel w/reflowed tin plate

6. TAIL LENGTH	
B	.100±.03
D	.200±.03
F	.300±.03

Shell Size	Part Number	N Dia. +.001 −.005	SS Dia. +.000 −.016	L +.011 −.000	M +.006 −.005	GG Dia. +.011 −.010	KK Dia. +.001 −.005
9	10-626**421**-XXX	.572	.662	.789	.125	.750	.672
11	**422**-XXX	.700	.810	.789	.125	.844	.781
13	**423**-XXX	.850	.960	.789	.125	.969	.906
15	**424**-XXX	.975	1.085	.789	.125	1.094	1.031
17	**425**-XXX	1.100	1.210	.789	.125	1.218	1.156
19	**426**-XXX	1.207	1.317	.789	.125	1.312	1.250
21	**427**-XXX	1.332	1.442	.789	.125	1.438	1.375
23	**428**-XXX	1.457	1.567	.821	.156	1.563	1.500
25	**429**-XXX	1.582	1.692	.821	.156	1.688	1.625

All dimensions for reference only.
Weld mounting hermetic receptacle also available.
Consult Amphenol for availability and dimensions.

SJT

Amphenol® SJT connectors combine unique design features of the scoop-proof LJT series within standard mounting dimensions of JT types. Available in a wide range of shell sizes, finishes, insert arrangements and accessories.

COMPONENTS:

Serrated and threaded shells, with a moisture sealing pilot for back shells, accept a wide range of accessories. Hermetic seal receptacles are available in carbon steel or stainless steel shells.

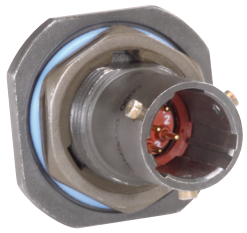

FEATURES:

- **100% scoop-proof design**
  Basic MIL-DTL-38999
  Series I* lengths
- **Standard mounting dimensions**
  MIL-DTL-38999,
  Series II** dimensions
- **Compliance with European Specifications**
  PAN6433-2, LN29729,
  VG96912

CONTACT RATING

Contact Size	Test Current		Maximum Millivolt Drop Crimp*	Maximum Millivolt Drop Hermetic
	Standard	Hermetic		
22M	3	2	45	60
22D	5	3	73	85
22	5	3	73	85
20	7.5	5	55	60
16	13	10	49	85
12	23	17	42	85

* When using silver plated wire

SERVICE RATING**

Service Rating	Suggested Operating Voltage (Sea Level)		Test Voltage (Sea Level)	Test Voltage 50,000 Ft.	Test Voltage 70,000 Ft.	Test Voltage 110,000 Ft.
	AC (RMS)	DC				
M	400	550	1300 VRMS	550 VRMS	350 VRMS	200 VRMS
N	300	450	1000 VRMS	400 VRMS	260 VRMS	200 VRMS
I	600	850	1800 VRMS	600 VRMS	400 VRMS	200 VRMS
II	900	1250	2300 VRMS	800 VRMS	500 VRMS	200 VRMS

** Please note that the establishment of electrical safety factors is left entirely in the designer's har
since he is in the best possible position to know what peak voltage, switching surges, transients, e
can be expected in a particular circuit.

SJT

How to Order, Alternate Rotations

1. Connector Type SJT, Shell Style, Service Class	2. Shell Size-Insert Arrangement.	3. Contact Type	4. Alternate Keying Position	5. Finish Variations Suffix
SJT07Y	12-98	P	A	(XXX)

1. CONNECTOR TYPE AND STYLE

SJT07Y	Jam Nut Receptacle
SJTIY	Solder Mounting Receptacle

Fused compression glass sealed inserts. Leakage rate less than 1.0x10-6 cc/sec at 15 psi differential; with interfacial seal.

2. SHELL SIZE & INSERT ARRANGEMENT SEE CHART BELOW

First number represents Shell Size,
second number is the Insert Arrangement.

Shell Size	Crimp	Hermetics* Class Y	Service Rating	Total Contacts	Contact Size									
					22D	22M	22	20	16	12	12 (Coax)	10 (Power)	8 (Coax)	8††† (Twinax)
12-98	X	X	I	10				10						
14-19	X	X	I	19				19						
14-35	X	X	M	37	37									
14-37	X	X	M	37		37								
16-99	X	X	I	23				21	2					
18-35	X	X	M	66	66									
18-66	X	X	M	66		66								
20-1	X	X	M	79		79								
20-35	X	X	M	79	79									
22-1	X	X	M	100		100								
22-35	X	X	M	100	100									

3. CONTACT TYPE

P	Pin Contacts - Solder

5. FINISH VARIATION SUFFIX

Finish	Suffix	Indicated Finish Standard for SJT Types
Hermetic Connectors		
Carbon Steel Shell, Tin Plated Shell and Contacts		SJT( )Y
Stainless Steel Shell, Gold Plated Contacts	Consult Amphenol	

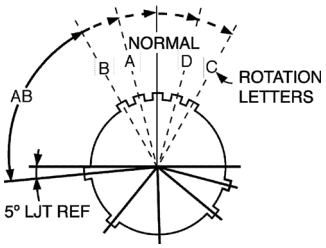

RELATIVE POSSIBLE POSITION OF ROTATED MASTER KEYWAY (front face of receptacle shown)

4. ALTERNATE KEYING POSITION

A plug with a given rotation letter will mate with a receptacle with the same rotation letter. The AB angle for a given connector is the same whether it contains pins or sockets. Inserts are not rotated in conjunction with the master key/keyway. AB angles shown are viewed from the front face of the connector. A receptacle is shown below. The angles for the plug are exactly the same, except the direction of rotation is opposite of that shown for the receptacle.

KEY/KEYWAY ROTATION
AB ANGLE OF ROTATION (DEGREES)

Shell Size	Normal	A	B	C	D
8	95				
10	95	81	67	123	109
12	95	75	63	127	115
14	95	74	61	129	116
16	95	77	65	125	113
18	95	77	65	125	113
20	95	77	65	125	113
22	95	80	69	121	110
24	95	80	69	121	110

SJTIY – Hermetic

Solder Mounting Receptacle

PART NUMBER BUILDER Page 40

COMMERCIAL

SJTIY

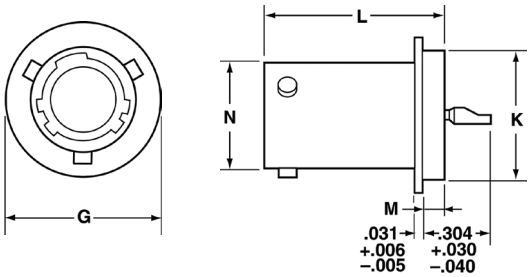

Shell Size	L +.011 –.000	M +.006 –.005	G Dia. +.011 –.010	K Dia. +.001 –.005	N +.001 –.005
8	.789	.125	.687	.562	.473
10	.789	.125	.797	.672	.590
12	.789	.125	.906	.781	.750
14	.789	.125	1.031	.906	.875
16	.789	.125	1.156	1.031	1.000
18	.789	.125	1.281	1.156	1.125
20	.789	.125	1.375	1.250	1.250
22	.821	.156	1.500	1.375	1.375
24	.821	.156	1.625	1.500	1.500

SJT07Y – Hermetic

Jam Nut Receptacle

PART NUMBER BUILDER Page 40

COMMERCIAL

SJT07Y

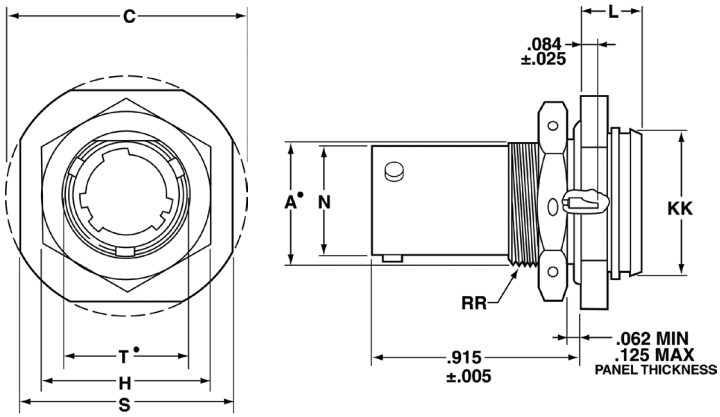

- "D" shaped panel cut-out dimensions

Shell Size	N +.001 –.005	C Max.	A• +.000 –.010	L Max.	H Hex +.017 –.016	S ±.016	KK +.011 –.000	RR Thread Class 2A UNEF (Plated)	T• +.010 –.000
8	.473	1.078	.542	.297	.750	.938	.642	.5625-24	.572
10	.590	1.203	.669	.297	.875	1.062	.766	.6875-24	.697
12	.750	1.391	.830	.297	1.062	1.250	.892	.8750-20	.884
14	.875	1.515	.955	.297	1.188	1.375	1.018	1.0000-20	1.007
16	1.000	1.641	1.084	.297	1.312	1.500	1.142	1.1250-18	1.134
18	1.125	1.766	1.208	.328	1.438	1.625	1.268	1.2500-18	1.259
20	1.250	1.953	1.333	.328	1.562	1.812	1.392	1.3750-18	1.384
22	1.375	2.078	1.459	.328	1.688	1.938	1.518	1.5000-18	1.507
24	1.500	2.203	1.580	.328	1.812	2.062	1.642	1.6250-18	1.634

All dimensions for reference only.

HERMETIC JAM NUT RECEPTACLE AJ7H/AS7H

HERMETIC SQUARE FLANGE RECEPTACLE AJ0H

AQUACON

The Amphenol® Aquacon Series of connectors has been designed to provide maximum service in oceanic or fluid immersion applications.

Specially designed type 316 stainless steel shells resist corrosion and provide a pressure withstanding connector. Positive threaded coupling. “O” rings, and a color band visual indicator assure sealing and proper mating.

Aquacon Connectors are available in two receptacle styles, with numerous MIL-DTL-38999 insert patterns.

FEATURES:

- 1500 PSI Capability
- “O” Ring Sealing, Thread
- Threaded Coupling
- Visual Mating Indication
- Design Flexibility

DESIGN FEATURES OF AQUACON SERIES CONNECTORS

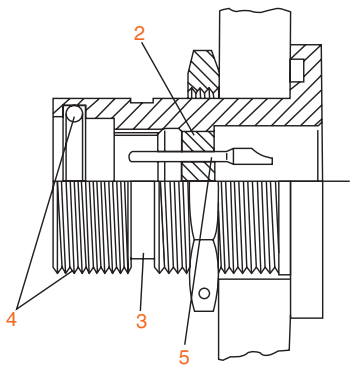

2. Hermetic inserts in MIL-DTL-38999 patterns.
3. Visual mating indicator
4. 1500 PSI sealing capability assured by threaded coupling and “O” ring
5. Pin contacts in receptacle

Aquacon Series

Specifications, Alternate Positioning

AQUACON CONTACT RATINGS

Contact Size	Test Current		Maximum Millivolt Drop			Crimp Well Data		Solder Well Data		
	Standard	Hermetic	Crimp	Solder	Solder Hermetic	Diameter	Depth	Diameter		Depth
22M	3	2	30	20	60	.029 ±.001	.141	.029	+.004 –.000	.094
22D	5	–	40	–	–	.0345 ±.001	.141	–		–
22	5	3	40	20	85	.0365 ±.001	.141	.036	+.004 –.000	.094
20	7.5	5	35	20	60	.047 ±.001	.209	.044	+.004 –.000	.125
16	13	10	25	20	85	.067 ±.001	.209	.078	+.004 –.002	.141
12	23	17	25	20	85	.100 ±.002	.209	.116 ±.004		.151

AQUACON SERVICE RATINGS

Service Rating	Suggested Operating Voltage (Sea Level)	
	AC (RMS)	DC
M	400	550
I	600	850
II	900	1250

The establishment of electrical safety factors is left entirely in the designer's hands, as he can best determine what peak voltage, switching surges, transients, etc. can be expected in a particular circuit.

ALTERNATE POSITIONING

Alternate positioning of connectors allows connectors with identical insert arrangements to be mounted side by side by providing a positive means of eliminating inadvertent cross-mating or cross- plugging.

Alternate positioning of Aquacon Series is achieved by a rotation of the master key/keyway, relative to the insert, as part of the shell manufacturing operation.

Recommended practice is to use alternate position inserts only when necessary.

AQUACON MASTER KEY/KEYWAY ROTATION

Shell Size	AB Angle of Rotation (Degrees)				
	Normal	A	B	C	D
8	100	82			118
10	100	86	72	128	114
12	100	80	68	132	120
14	100	79	66	134	121
16	100	82	70	130	118
18	100	82	70	130	118
20	100	82	70	130	118
22	100	85	74	126	115
24	100	85	74	126	115

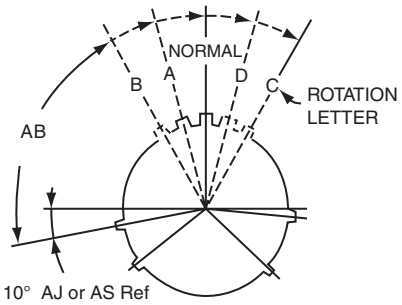

RELATIVE POSSIBLE POSITION OF ROTATED MASTER KEYWAY

(FRONT FACE OF AJ or AS RECEPTACLE SHOWN)

Aquacon Series

Insert Availability

Aquacon Shell Size	Hermetic*	Service Rating**	Total Contacts	Contact Size					
				22D	22M	22	20	16	12
8-3	X	M	3				3		
8-6	X	M	6		6				
8-35	X	M	6	6					
8-98	X	I	3				3		
10-5	X	I	5				5		
10-13	X	M	13		13				
10-35	X	M	13	13					
10-98	X	I	6				6		
12-3	X	II	3					3	
12-8	X	I	8				8		
12-35	X	M	22	22					
12-98	X	I	10				10		
14-5	X	II	5					5	
14-18	X	I	18				18		
14-35	X	M	37	37					
14-37	X	M	37		37				
16-6†	X	I	6						6
16-8	X	II	8					8	
16-26	X	I	26				26		
16-35	X	M	55	55					
16-55	X	M	55		55				
18-32	X	I	32				32		
18-35	X	M	66	66					
18-66	X	M	66		66				
20-16	X	II	16					16	
20-41	X	I	41				41		
22-21	X	II	21					21	
22-55	X	I	55				55		
24-19†	X	I	19						19

* Tooled for pin inserts only (contact Amphenol for socket availability).
** See specifications
† AS Aquacon version - these arrangements use SJT (38999 type) patterns that incorporate size 12 contacts.
See how to order page 47.
Additional insert arrangements may be made available upon request.

Amphenol Aerospace

Front face of pin inserts illustrated

Insert Arrangement	8-3	8-6	8-35	8-98	10-5	10-13	10-35
Service Rating	M	M	M	I	I	M	M
Number of Contacts	3	6	6	3	5	13	13
Contact Size	20	22M	22D	20	20	22M	22D

Insert Arrangement	10-98	12-3	12-8	12-35	12-98	14-5	14-18
Service Rating	I	II	I	M	I	II	I
Number of Contacts	6	3	8	22	10	5	18
Contact Size	20	16	20	22D	20	16	20

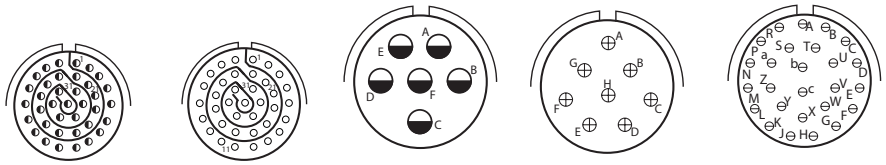

Insert Arrangement	14-35	14-37	16-6†	16-8	16-26
Service Rating	M	M	I	II	I
Number of Contacts	37	37	6	8	26
Contact Size	22D	22M	12	16	20

See page 43 for service ratings and contact sizes.
† AS Aquacon version - uses an SJT (38999 type) pattern with size 12 contacts.
See how to order page 47.

CONTACT LEGEND

8	12	16	20	22	22M	22D

AJ Aquacon

Insert Arrangements

Front face of pin inserts illustrated

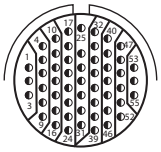
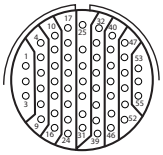
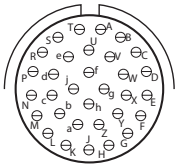
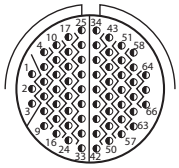
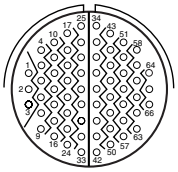

Insert Arrangement	16-35	16-55	18-32	18-35	18-66
Service Rating	M	M	I	M	M
Number of Contacts	55	55	32	66	66
Contact Size	22D	22M	20	22D	22M

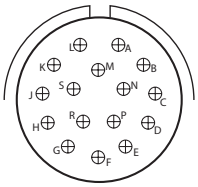
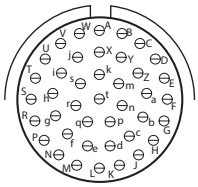
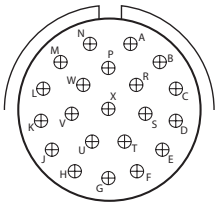
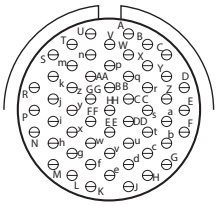

Insert Arrangement	20-16	20-41	22-21	22-55
Service Rating	II	I	II	I
Number of Contacts	16	41	21	55
Contact Size	16	20	16	20

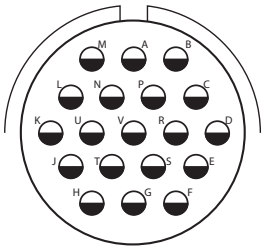

Insert Arrangement	24-19†
Service Rating	I
Number of Contacts	19
Contact Size	12

See page 43 for service ratings and contact sizes.
† AS Aquacon version - uses an SJT (38999 type) pattern with size 12 contacts. See how to order page 47.

CONTACT LEGEND

8 12 16 20 22 22M 22D

AJ Aquacon

How to Order

1. Connector & Shell Style	2. Contact Type	3. Shell Size – Insert Arrangement	4. Contact Configuration	5. Insert Rotation
AJ7	H	20-41	P	A

	AQUACON IMMERSIBLE CONNECTORS	
	Aquacon with JT (38999 Type) Inserts	Aquacon with SJT (38999 Type) inserts- size 12 contacts only
Fused compression glass sealed inserts. Leakage rate less than 1.0x10-6 cc/sec at 15 psi differential; with interfacial seal.		
Hermetic — Jam Nut Receptacle	AJ7	AS7
Hermetic — Square Flange	AJ0	

2. CONTACT TYPE

	Receptacle
H	Hermetic (Glass Seal) Solder Termination (Receptacles only)

3. INSERT ARRANGEMENT

Shell Size & Insert Arrangements are on pages 44. First number represents Shell Size, second number is the Insert Arrangement.

4. CONTACTS

P	Pin Contacts - Solder

5. ALTERNATE KEYING POSITION

Alternate positioning of Aquacon Series is achieved by a rotation of the master key/keyway, relative to the insert, as part of the shell manufacturing operation.

Recommended practice is to use alternate position inserts only when necessary.

AQUACON MASTER KEY/KEYWAY ROTATION

Shell Size	AB Angle of Rotation (Degrees)				
	Normal	A	B	C	D
8	100	82			118
10	100	86	72	128	114
12	100	80	68	132	120
14	100	79	66	134	121
16	100	82	70	130	118
18	100	82	70	130	118
20	100	82	70	130	118
22	100	85	74	126	115
24	100	85	74	126	115

Hermetics are available only in pin contacts.

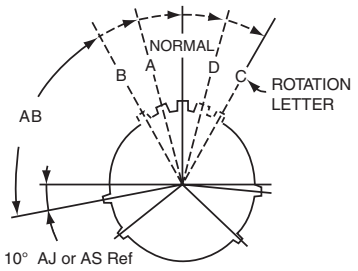

RELATIVE POSSIBLE POSITION OF ROTATED MASTER KEYWAY

(FRONT FACE OF AJ or AS RECEPTACLE SHOWN)

Consult Amphenol Aerospace for other options and special variations available.

AJ7H / AS7H Aquacon

Hermetic Jam Nut Receptacle

PART NUMBER BUILDER Page 47

AJ7H-
AS7H-

AJ7H-XX-XXX(XXX)

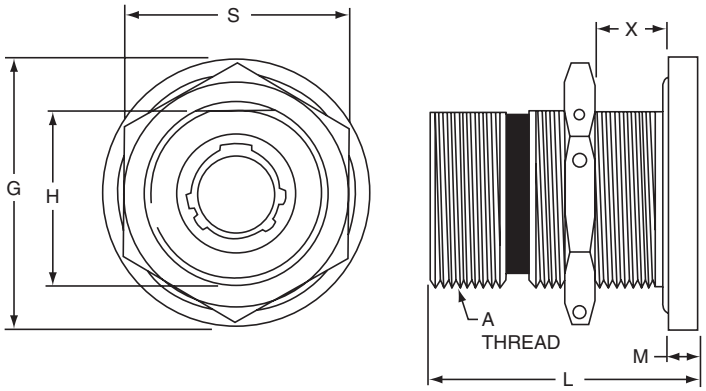

AS7H-XX-XXX(XXX)

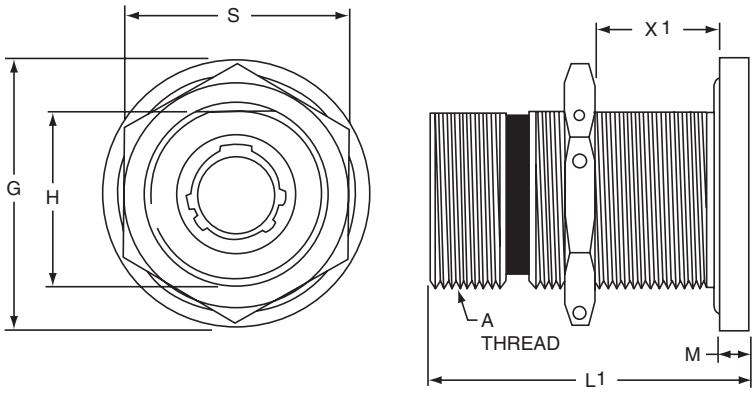

AJ Aquacon use JT (38999 type) inserts that incorporate contact sizes 22D, 22M, 22, 20 or 16. AS Aquacon use SJT (38999 type) inserts that incorporate size 12 contacts

Shell Size	A Thread Class 2A	G Dia.	H +.000 –.000	L ±.010 (Hermetic AJ)	L1 +.000 –.010 (Hermetic AS)	M	S Hex ±.016	X Bulkhead Thickness (AJ)	X1 Bulkhead Thickness (AS)
8	.750-20 UNEF	1.125	.700	1.125	1.500	.125	.938	.03 – .31	.06 – .72
10	.875-20 UNEF	1.250	.825	1.125	1.500	.125	1.062	.03 – .31	.06 – .72
12	1.000-20 UNEF	1.406	.950	1.125	1.500	.125	1.188	.03 – .31	06 – .72
14	1.125-18 UNEF	1.531	1.075	1.125	1.500	.125	1.312	.03 – .31	06 – .72
16	1.250-18 UNEF	1.654	1.200	1.125	1.500	.125	1.438	.03 – .31	06 – .72
18	1.375-18 UNEF	1.844	1.325	1.125	1.500	.125	1.562	.03 – .31	06 – .72
20	1.500-18 UNEF	2.000	1.450	1.250	1.500	.188	1.688	.03 – .38	06 – .65
22	1.625-18 UNEF	2.125	1.575	1.250	1.500	.188	1.812	.03 – .38	06 – .65
24	1.750-18 UNS	2.250	1.700	1.250	1.500	.188	2.000	.03 – .38	06 – .65

All dimensions for reference only.

AJ0H Aquacon

Hermetic Square Flange Receptacle

38999 III
38999 II
38999 I
SJT
Aquacon
2M
83723
26482
26500

PART NUMBER BUILDER Page 47

AJOH-

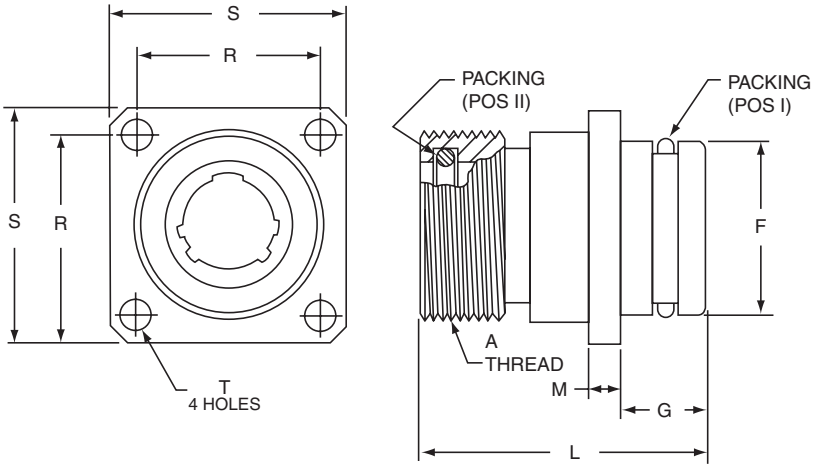

AJ0H-XX-XXX(XXX)

The Aquacon Hermetic Square Flange Receptacle is available in AJ style only which incorporates contact sizes 22D, 22M, 22, 20 or 16.

Shell Size	A Thread Class 2A	F Dia. +.000 –.001	G ±.030	L	M	R	S	T ±.005	Packing Pos I Part Number	Packing Pos II Part Number
8	.750-20 UNEF	.685	.344	1.125	.125	.719	.938	.128	10-90351-15	10-90351-14
10	.875-20 UNEF	.810	.344	1.125	.125	.812	1.031	.128	10-90351-17	10-90351-16
12	1.000-20 UNEF	.935	.344	1.125	.125	.906	1.125	.128	10-90351-19	10-90351-18
14	1.125-18 UNEF	1.060	.344	1.125	.125	.969	1.219	.128	10-90351-21	10-90351-20
16	1.250-18 UNEF	1.185	.344	1.125	.125	1.062	1.312	.128	10-90351-23	10-90351-22
18	1.375-18 UNEF	1.248	.344	1.125	.125	1.156	1.438	.128	10-90351-24	10-90351-24
20	1.500-18 UNEF	1.373	.375	1.219	.188	1.250	1.562	.128	10-90351-26	10-90351-26
22	1.625-18 UNEF	1.498	.375	1.219	.188	1.375	1.688	.147	10-90351-28	10-90351-28
24	1.750-18 UNS	1.623	.375	1.219	.188	1.500	1.812	.147	10-90351-29	10-90351-29

All dimensions for reference only.

Aquacon Series

Installation Instructions, Application Tools

MOLDING

Suggested method of assembly to cable for Aquacon plugs and cable connecting receptacles is molding. The mold sealing diameter has been designed to use a common mold for both plug and receptacle in a given shell size.

SEALING

In a mated condition, the red visual mating indicator band must be fully concealed by the plug coupling nut to assure to reliable, pressure rated sealed joint. Failure to fully tighten the coupling nut may allow leakage through the main joint seal. The red visual mating indicator is so located that only a full and proper mating of the plug and receptacle will cause the indicator to be fully hidden by the plug coupling nut.

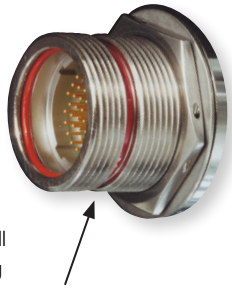

Red Visual Mating Indicator Band

MOUNTING SURFACES

The integrity of an "O" ring hydrostatic shell is dependent upon the flatness of the surface on which the receptacle is mounted. Surface finishes of 23 microns or less are recommended for "O" ring sealing areas when jam nut or through bulkhead receptacles are mounted.

MOUNTING CUTOUTS

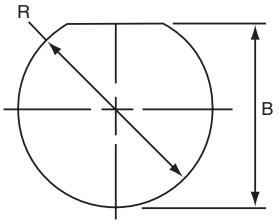

Rear mount jam nut

Shell Size	B +.010 –.000	R +.010 –.000
8	.705	.759
10	.830	.884
12	.955	1.007
14	1.080	1.134
16	1.205	1.259
18	1.330	1.384
20	1.455	1.507
22	1.580	1.634
24	1.705	1.759

RECEPTACLE "O" RING RACKING REQUIREMENTS ARP 568 UNIFORM DASH NUMBER

Shell Size	Main Joint Seal	Shell to Mounting Surface Seal
		Jam Nut
8	ARP-014	ARP-019
10	ARP-016	ARP-021
12	ARP-018	ARP-023
14	ARP-020	ARP-025
16	ARP-022	ARP-027
18	ARP-024	ARP-029
20	ARP-026	ARP-030
22	ARP-028	ARP-031
24	ARP-029	ARP-032

WIRE AND CABLE PREPARATION

1. Cut wire or cable to desired length. Strip insulation from end of wire in accordance with the following table. Hot wire stripping methods are recommended. Avoid nicking or cutting wire strands.

WIRE STRIP LENGTH IN INCHES

Contact Type	Contact Size					
	22M	22D	22	20	16	12
Solder	1/8	–	1/8	5/32	5/32	
Crimp	1/8 – 5/32			7/32 – 1/4		

SOLDER CONTACT TERMINATION

1. Clean conductors and pre-tin with a good grade 60/40 tin-lead solder to 1/16 inch.
2. Pre-tin contact solder well.
3. With connector in a suitable holding device, solder wells facing operator, and the cutaway portion of the wells up, insert pre-tinned conductor into contact well. Apply heat to closed side of wire well to make joint. Remove heat and allow joint to cool.
4. A resistance soldering unit of approximately 125 watts is recommended. If a soldering iron is used, do not exceed 20 watts for size 22M, 22D and 22 contacts; 80 watts for size 20: and 150 watts for size 16 and 12 contacts.
5. Wipe or brush excess flux from terminations.

2M805	2M804	2M803	2M801
Tri-Start	Push-Pull	Bayonet	Dual-Start

Micro38999

The New Aerospace Standard

The New Circular Connector Standard. Smaller, lighter, higher contact density, and just as durable as D38999 Mil-spec connectors.

FEATURES:

- 4 Coupling Styles
- Integral Backshells
- PC Tail Termination Available
- 60% Weight Reduction from 38999
- 50% Size Reduction from 38999

2M Series Selection Table

2M801, 2M803, 2M804 and 2M805

SERIES	2M805	2M804	2M803	2M801
Pages	Pages 56-60	Pages 61-64	Pages 65-67	Page 68-72
TYPE	Tri-Start ACME Thread	Push-Pull	Bayonet	Dual-Start ACME Thread
DESCRIPTION	"Anti-Decoupling" ratchet mechanism and ground spring for military airframes and avionics boxes. Fast mating.	Breakaway connector for headsets and tactical equipment. Gold-plated spring for long mating life and superior EMI shielding.	Quick-mating, light duty, general purpose. Not rated for immersion, 50 milliohms shell-to-shell resistance.	More rugged keys and threads. Faster mating.
CONTACTS	1 to 130	1 to 85	1 to 55	1 to 130
COUPLING	Tri-Start Thread	Push, Pull Quick-Disconnect	1/4 turn lock Bayonet	Threaded Coupling with 1 1/2 Turns to Full Mate
WATER IMMERSION, MATED	MIL-STD-810 Method 512 1 Meter for 1 Hour	MIL-STD-810 Method 512 1 Meter for 1 Hour	Splash proof	MIL-STD-810 Method 512 1 Meter for 1 Hour
EMI SHIELDING	Excellent	Excellent	Fair	Very Good
VIBRATION AND SHOCK	43.9 g's Random Vibration, Sine Vibration 60 g; 300 g's Shock	37 g's Random Vibration; 300 g's Shock	37 g's Random Vibration; 300 g's Shock	43.9 g's Random Vibration, Sine Vibration 60 g; 300 g's Shock
MATING CYCLES	500 Cycles	2000 Cycles	1000 Cycles Aluminum 2000 Cycles Stainless Steel	2000 Cycles (-16 Plugs) 500 Cycles (-26 Plugs)
ELECTRICAL PERFORMANCE	#12: 23 AMP, 1800 VAC #16: 13 AMP, 1800 VAC #20: 7.5 AMP, 750 VAC #23: 5 AMP, 500 VAC	#12: 23 AMP, 1800 VAC #16: 13 AMP, 1800 VAC #20: 7.5 AMP, 750 VAC #23: 5 AMP, 500 VAC	#12: 23 AMP, 1800 VAC #16: 13 AMP, 1800 VAC #20: 7.5 AMP, 750 VAC #23: 5 AMP, 500 VAC	#12: 23 AMP, 1800 VAC #16: 13 AMP, 1800 VAC #20: 7.5 AMP, 750 VAC #23: 5 AMP, 500 VAC

2M Series Technical Information

Insert Arrangements

Front face of pin inserts illustrated (Socket Reversed)

CONTACT LEGEND 12 16 20 20HD 20 23

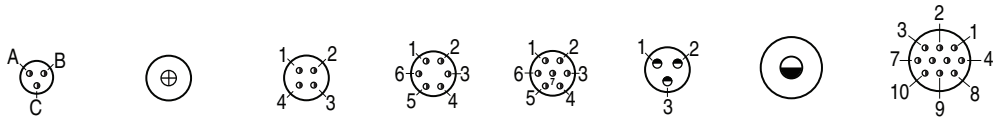

2M801 2M803 2M804	5-3	6-1*	6-4	6-6	6-7	6-23	7-1*	7-10
2M805	NA	8-1*	8-4	8-6	8-7	8-23	9-1*	9-10
No. of Contacts	3	1	4	6	7	3	1	10
Contact Size	#23	#16	#23	#23	#23	#20HD	#12	#23
DWV Voltage (VAC)	500	1800	500	500	500	750	1800	500
Current Rating (Amps)	5	13	5	5	5	7.5	23	5

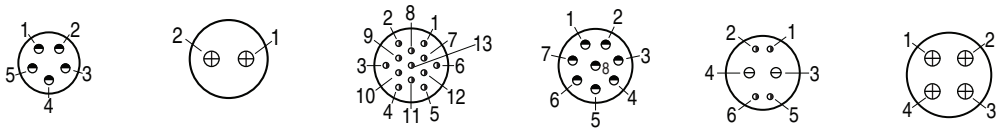

2M801 2M803 2M804	7-25	8-2	8-13	8-28	8-200*		9-4
2M805	9-25	10-2	10-13	10-28	10-200*		11-4
No. of Contacts	5	2	13	8	2	4	4
Contact Size	#20HD	#16	#23	#20HD	#20	#23	#16
DWV Voltage (VAC)	750	1800	500	750	1000	500	1800
Current Rating (Amps)	7.5	13	5	7.5	7	5	13

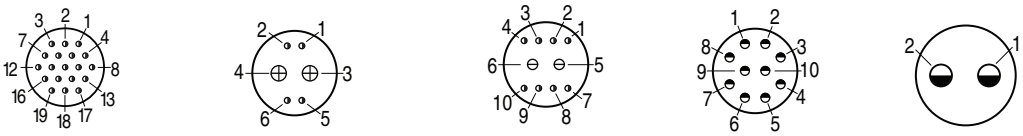

2M801 2M803 2M804	9-19	9-200		9-201		9-210	10-2
2M805	11-19	11-200		11-201		11-210	12-2
No. of Contacts	19	2	4	2	8	10	2
Contact Size	#23	#16	#23	#20	#23	#20HD	#12
DWV Voltage (VAC)	500	1800	500	1000	500	750	1800
Current Rating (Amps)	5	13	5	7.5	5	7.5	23

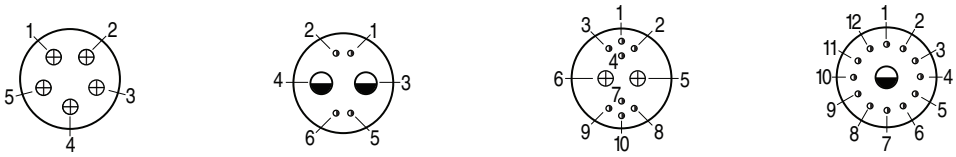

2M801 2M803 2M804	10-5	10-201		10-202*		10-200*	
2M805	12-5	12-201		12-202*		12-200*	
No. of Contacts	5	2	4	2	8	1	12
Contact Size	#16	#12	#23	#16	#23	#12	#23
DWV Voltage (VAC)	1800	1800	500	1800	500	1800	500
Current Rating (Amps)	13	23	5	13	5	23	5

2M Series Technical Information

Insert Arrangements

Front face of pin inserts illustrated (Socket Reversed)

CONTACT LEGEND 12 16 20 20HD 20 23

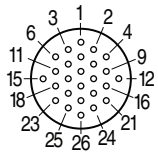

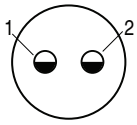

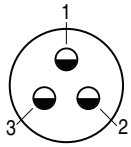

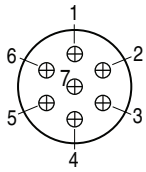

2M801	**10-26**	**13-2**	**13-3***	**13-7**
2M803 2M804	**10-26**	**12-2**	**12-3***	**12-7**
2M805	**12-26**	**15-2**	**15-3***	**15-7**
No. of Contacts	26	2	3	7
Contact Size	#23	#12	#12	#16
DWV Voltage (VAC)	500	1800	1800	1800
Current Rating (Amps)	5	23	23	13

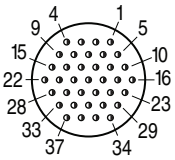

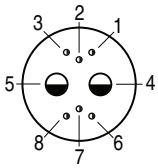

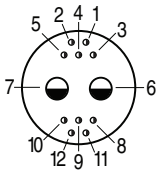

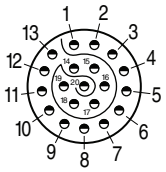

2M801	**13-37**	**13-200***		**13-201**		**13-220**
2M803 2M804	**12-37**	**12-200**		**12-201**		**12-220**
2M805	**15-37**	**15-200***		**15-201**		**15-220**
No. of Contacts	37	2	6	2	10	20
Contact Size	#23	#12	#23	#12	#23	#20HD
DWV Voltage (VAC)	500	1800	500	1800	500	750
Current Rating (Amps)	5	23	5	23	5	7.5

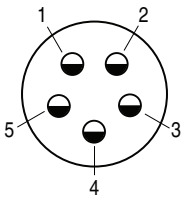

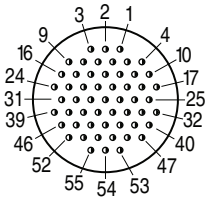

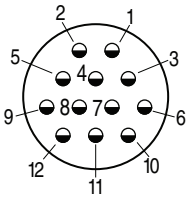

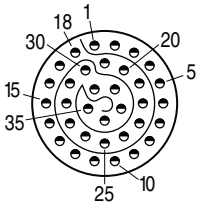

2M801	**16-5**	**16-55**	**16-12**	**16-235**
2M803 2M804	**14-5**	**14-55**	**14-12**	**14-235**
2M805	**18-5**	**18-55**	**18-12**	**18-235**
No. of Contacts	5	55	12	35
Contact Size	#12	#23	#16	#20HD
DWV Voltage (VAC)	1800	500	1800	750
Current Rating (Amps)	23	5	13	7.5

*Not tooled for every insert pattern

2M Series Technical Reference

Insert Arrangements

Front face of pin inserts illustrated (Socket Reversed)

CONTACT LEGEND 12 16 20 20HD 20 23

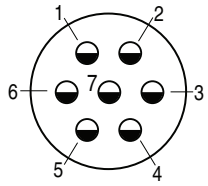

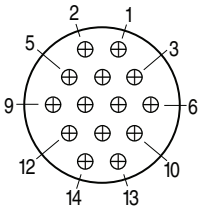

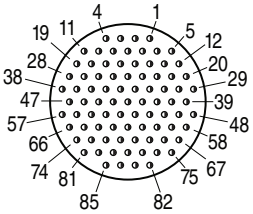

2M801	17-7	17-14*	17-85
2M803 2M804	15-7	15-14	15-85
2M805	19-7	19-14*	19-85
No. of Contacts	7	14	85
Contact Size	#12	#16	#23
DWV Voltage (VAC)	1800	1800	500
Current Rating (Amps)	23	13	5

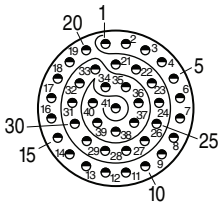

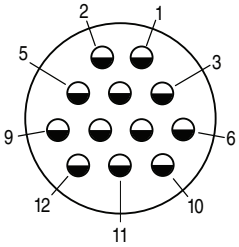

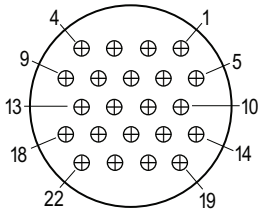

2M801	17-241*	21-12	21-22*
2M805	19-241*	23-12	23-22*
No. of Contacts	41	12	22
Contact Size	#20HD	#12	#16
DWV Voltage (VAC)	750	1800	1800
Current Rating (Amps)	7.5	23	13

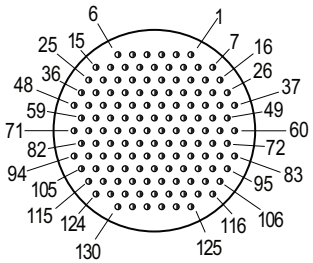

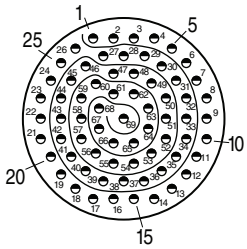

2M801	21-130	21-269
2M805	23-130	23-269
No. of Contacts	130	69
Contact Size	#23	#20HD
DWV Voltage (VAC)	500	750
Current Rating (Amps)	5	7.5

*Not tooled for every insert pattern

2M805
Tri-Start

FEATURES:

- Low profile shells for minimum box protrusion
- Shell Standoffs for PC Board washout
- Non-removable PC and/or Solder cup contacts

2M805 Series of Hermetic Receptacles provide superior sealing of 1x10-8 cc/second helium leak rate and are 100% tested prior to shipping. This superior sealing is accomplished through the use of glass insulator fused to stainless steel shells and iron alloy contacts.

2M805 Tri-Start Hermetic Receptacle

Ordering Guide for 2M805-006

1. Series	2. Shell Size	3. Service Class	4. Shell Size-Insert Aggmt	5. Contacts	6. Keying
2M805-006	-07	Z1	12-26	C	A

Example Part Number

1. SERIES

Part #	Description
2M805-006	Hermetic Receptacle

2. SHELL SIZE

Part #	Description
-02	Square Flange
-03	Weld Mount (only available in Z1 Finish)
-07	Jam Nut for Rear Panel Mounting Receptacle

3. SERVICE CLASS

Material	Part #	Description	RoHS
Stainless Steel	Z1	Passivated	
	ZL	Electrolytic Nickel	

4. SHELL SIZE-INSERT ARRANGEMENT

See Table on pages 53-55

5. CONTACTS

Part #	Description
P	Pin- Solder Cup
C	Pin-PC Tail
H	Pin, Solder Cup- Without Interfacial Seal
Y	Pin, PC Tail- Without Interfacial Seal

6. KEYING

Part #	A°	B°
A	150°	210°
B	75°	210°
C	95°	230°
D	140°	275°

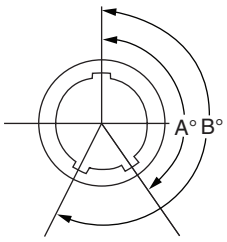

Receptacle View

Note: Please contact the factory directly for a listing of tooled interfacial seals for the hermetically sealed connectors.

Please note, Amphenol standard 2M hermetic connector are provided less the interfacial seal. Please contact the factory for availability on the interfacial seal.

2M805 Tri-Start Flange Mount Hermetic

2M805-006-02

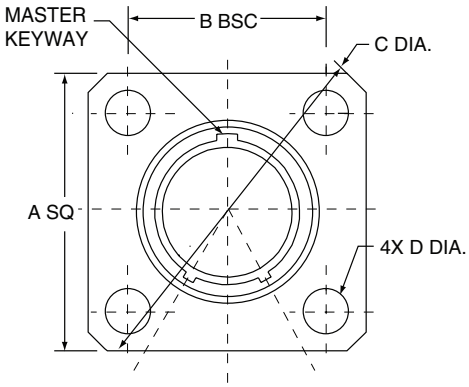

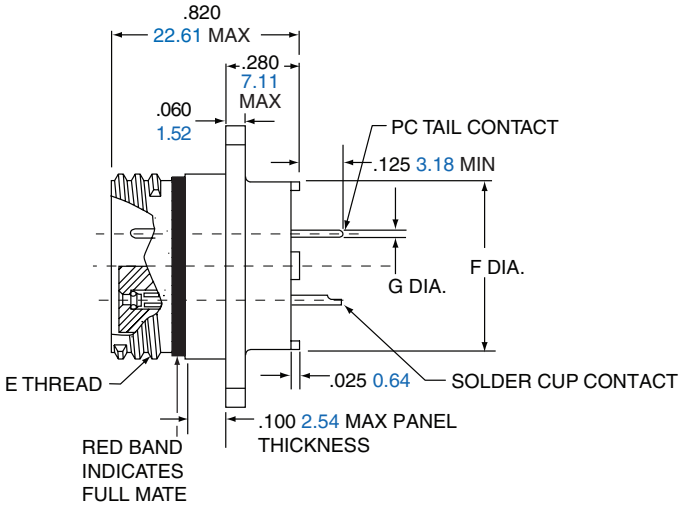

Inches-Millimeters

Shell Size	A Sq.		B BSC.		C Dia.		D Dia.		E Threads	F Dia.		G PC Tail Dia.
	in.	mm.	in.	mm.	in.	mm.	in. ±.003	mm. ±.08		in.	mm.	
8	.853	21.67	.660	16.76	1.153	29.29	.091	2.31	.5000-.1P-.3L-TS-2A	.330	8.38	**#23** .018/.022 0.46/0.56
9	.916	23.27	.723	18.36	1.233	31.32	.091	2.31	.5625-.1P-.3L-TS-2A	.432	10.97	
10	.978	24.84	.785	19.94	1.333	33.86	.091	2.31	.6250-.1P-.3L-TS-2A	.493	12.52	**#20/20HD** .024/.028 0.64/0.69
11	1.042	26.47	.848	21.54	1.413	35.89	.091	2.31	.6875-.1P-.3L-TS-2A	.551	14.00	
12	1.102	27.99	.909	23.09	1.503	38.18	.091	2.31	.7500-.1P-.3L-TS-2A	.622	15.80	**#16** .060/.064 1.521/1.63
15	1.291	32.79	1.058	26.87	1.753	44.53	.125	3.18	.9375-.1P-.3L-TS-2A	.703	17.86	
18	1.478	37.54	1.255	31.88	2.003	50.88	.125	3.18	1.1250-.1P-.3L-TS-2A	.863	21.92	**#12** .092/.096 2.34/2.44
19	1.540	39.12	1.327	33.71	2.097	53.26	.125	3.18	1.1875-.1P-.3L-TS-2A	.912	23.16	
23	1.790	45.47	1.570	39.88	2.443	62.05	.125	3.18	1.4375-.1P-.3L-TS-2A	1.163	29.54	

2M805 Tri-Start Solder Mount Hermetic

2M805-006-03

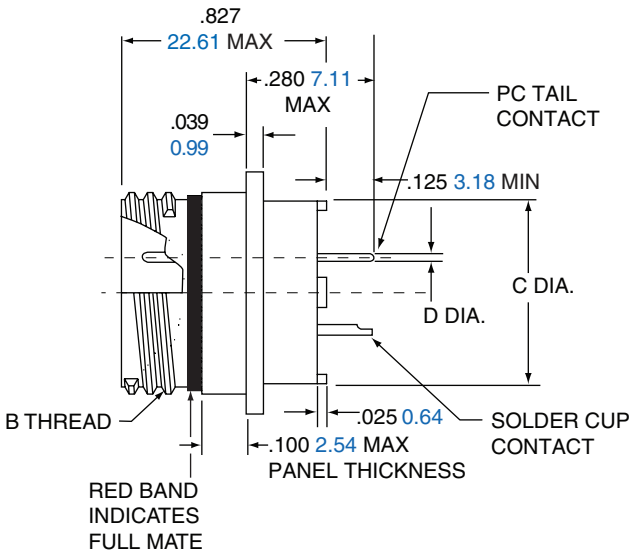

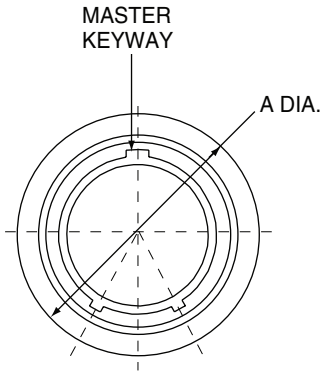

Inches-Millimeters

Shell Size	A Dia.		B Threads	C Dia.		D PC Tail Dia.
	in.	mm.		in.	mm.	
8	.625	15.88	.5000-.1P-.3L-TS-2A	.330	8.38	**#23** .018/.022 0.46/0.56
9	.688	17.48	.5625-.1P-.3L-TS-2A	.432	10.97	
10	.750	19.75	.6250-.1P-.3L-TS-2A	.493	12.52	**#20/20HD** .025/.027 0.64/0.69
11	.812	20.62	.6875-.1P-.3L-TS-2A	.551	14.00	
12	.875	22.23	.7500-.1P-.3L-TS-2A	.620	15.78	**#16** .060/.064 1.521/1.63
15	1.062	26.97	.9375-.1P-.3L-TS-2A	.703	17.86	
18	1.250	31.75	1.1250-.1P-.3L-TS-2A	.863	21.92	**#12** .092/.096 2.34/2.44
19	1.312	33.32	1.1875-.1P-.3L-TS-2A	.912	23.16	
23	1.563	39.70	1.4375-.1P-.3L-TS-2A	1.162	29.51	

2M805 Tri-Start Jam Nut Hermetic

2M805-006-07

2M805-006-07

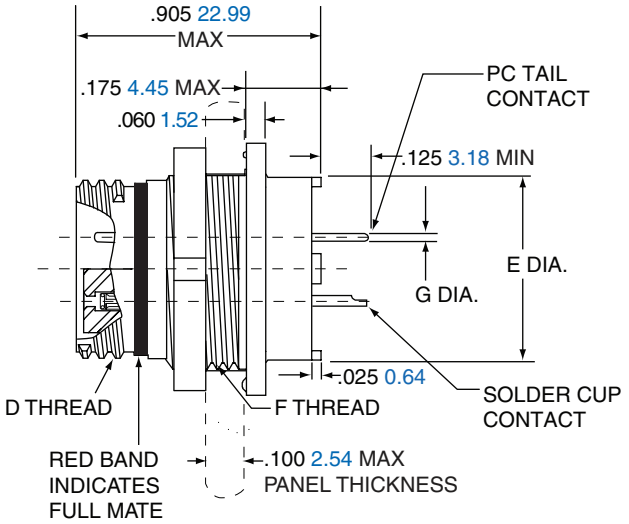

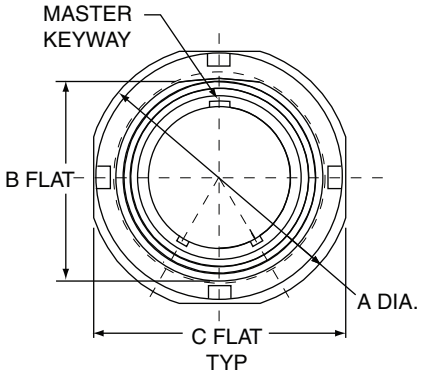

Inches-Millimeters

Shell Size	A Dia.		B Flat		C Flat		D Threads	E Dia.		F Threads	G PC Tail Dia.
	in.	mm.	in.	mm.	in.	mm.		in.	mm.		
8	.760	19.30	.535	13.59	.730	18.54	.5000-.1P-.3L-TS-2A	.330	8.38	.5625-28 UN-2A	**#23** .018/.022 0.46/0.56
9	.880	22.35	.661	16.79	.850	21.59	.5625-.1P-.3L-TS-2A	.432	10.97	.6875-28 UN-2A	
10	.880	22.35	.661	16.79	.850	21.59	.6250-.1P-.3L-TS-2A	.493	12.52	.6875-28 UN-2A	**#20/20HD** .024/.028 0.64/0.69
11	.955	24.26	.721	18.31	.925	23.50	.6875-.1P-.3L-TS-2A	.551	14.00	.7500-28 UN-2A	
12	1.060	26.92	.784	19.91	1.035	26.29	.7500-.1P-.3L-TS-2A	.620	15.78	.8125-28 UN-2A	**#16** .060/.064 1.521/1.63
15	1.203	30.56	.970	24.64	1.173	29.79	.9375-.1P-.3L-TS-2A	.703	17.86	1.0000-28 UN-2A	
18	1.389	35.28	1.147	29.13	1.359	34.52	1.1250-.1P-.3L-TS-2A	.863	21.92	1.1875-28 UN-2A	**#12** .092/.096 2.34/2.44
19	1.450	36.83	1.221	31.01	1.420	36.07	1.1875-.1P-.3L-TS-2A	.912	23.16	1.2500-28 UN-2A	
23	1.705	43.31	1.470	37.34	1.675	42.55	1.4375-.1P-.3L-TS-2A	1.162	29.51	1.5000-28 UN-2A	

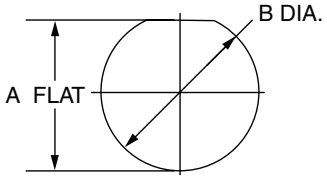

PANEL CUTOUT FOR JAM NUT				
Shell Size	A Flat		B Dia	
	in. ±.002	mm. ± 0.05	in. ±.005	mm. ± 0.13
8	.543	13.79	.572	14.53
9	.669	16.99	.698	17.73
10	.669	16.99	.698	17.73
11	.729	18.51	.760	19.30
12	.792	20.17	.822	20.88
15	.978	24.84	1.010	25.65
18	1.155	29.34	1.198	30.43
19	1.231	31.27	1.260	32.00
23	1.480	37.59	1.510	38.35

2M804
Push-Pull

2M804 Series of Hermetic Receptacles provide superior sealing of 1x10-8 cc/second helium leak rate and are 100% tested prior to shipping. This superior sealing is accomplished through the use of glass insulator fused to stainless steel shells and iron alloy contacts.

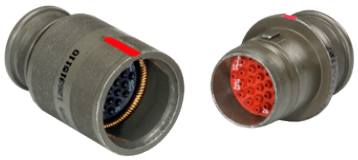

FEATURES:

- Push-pull coupling
- Excellent EMI shielding
- Rated to 38999 immersions
- Quick-disconnect

2M804 Push-Pull Hermetic Receptacle

Ordering Guide for 2M804-006

1. Series	2. Shell Size	3. Service Class	4. Shell Size-Insert Aggmt	5. Contacts	6. Keying
2M804-006	-07	Z1	9-19	P	A

Example Part Number

1. SERIES

Part #	Description
2M804-006	Hermetic Receptacle with Printed Circuit Board Contacts or Solder Cup Contacts.

2. SHELL SIZE

Part #	Description
-00	Jam Nut for Front Panel Mounting
-07	Jam Nut for Rear Panel Mounting Receptacle

3. SERVICE CLASS

Material	Part #	Description	RoHS
Stainless Steel	Z1	Passivated	✓
	ZL	Electrolytic Nickel	✓

4. SHELL SIZE-INSERT ARRANGEMENT

See Table pg 53-55

5. CONTACTS

Part #	Description
P	Pin- Solder Cup
C	Pin-PC Tail
H	Pin, Solder Cup- Without Interfacial Seal
Y	Pin, PC Tail- Without Interfacial Seal

6. KEYING

Part #	A°	B°
A	150°	210°
B	75°	210°
C	95°	230°
D	140°	275°

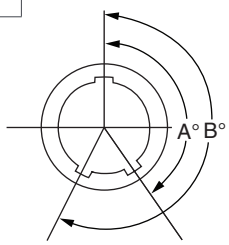

Receptacle View

Note: Please contact the factory directly for a listing of tooled interfacial seals for the hermetically sealed connectors.
Please note, Amphenol standard 2M hermetic connector are provided less the interfacial seal.
Please contact the factory for availability on the interfacial seal.

2M804 Push-Pull Rear Panel Jam Nut Hermetic

2M804-006-07

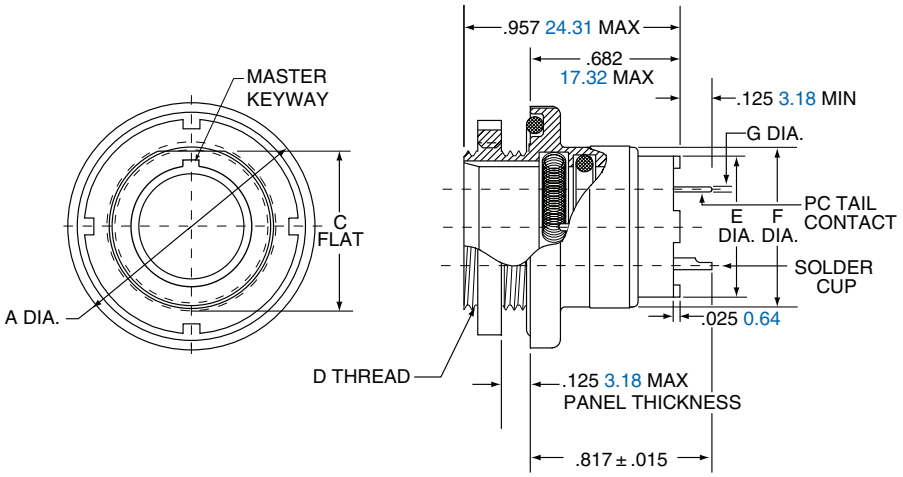

Shell Size	A Dia.		C Flat		D Thread UN-2A	E Dia.		F Dia.		G PC Tail Dia.
	in.	mm.	in.	mm.		in.	mm.	in.	mm.	
5	.773	19.63	.414	10.52	.4375-32	.274	6.96	.448	11.38	**#23** .018/.022 0.46/0.56
6	.833	21.16	.468	11.89	.5000-32	.329	8.36	.513	13.03	
7	.903	22.94	.593	15.06	.6250-28	.431	10.95	.573	14.55	
8	.958	24.33	.593	15.06	.6250-28	.493	12.52	.596	15.14	**#20/20HD** .025/.027 0.64/0.69
9	.998	25.35	.653	16.59	.6875-28	.551	14.00	.691	17.55	
10	1.083	27.51	.721	18.31	.7500-28	.619	15.72	.728	18.49	**#16** .060/.064 1.52/1.63
12	1.183	30.05	.843	21.41	.8750-28	.703	17.86	.883	22.43	
14	1.323	33.60	.968	24.59	1.0000-28	.863	21.92	1.003	25.48	**#12** .092/.096 2.34/2.44
15	1.373	34.87	1.036	26.31	1.0625-20	.913	23.19	1.063	27.00	

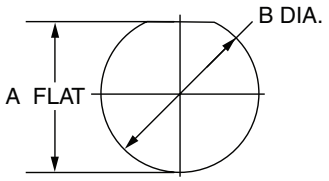

JAM NUT PANEL CUTOUT				
Shell Size	A Flat		B Dia.	
	in. ±.002	mm. ± 0.05	in. ±.005	mm. ± 0.13
5	.423	10.74	.448	11.38
6	.475	12.07	.510	12.95
7	.602	15.29	.635	16.13
8	.602	15.29	.635	16.13
9	.663	16.84	.698	17.73
10	.729	18.82	.760	19.30
12	.851	21.62	.885	22.48
14	.976	24.79	1.010	25.65

2M804 Front Panel Jam Nut Hermetic

2M804-006-00

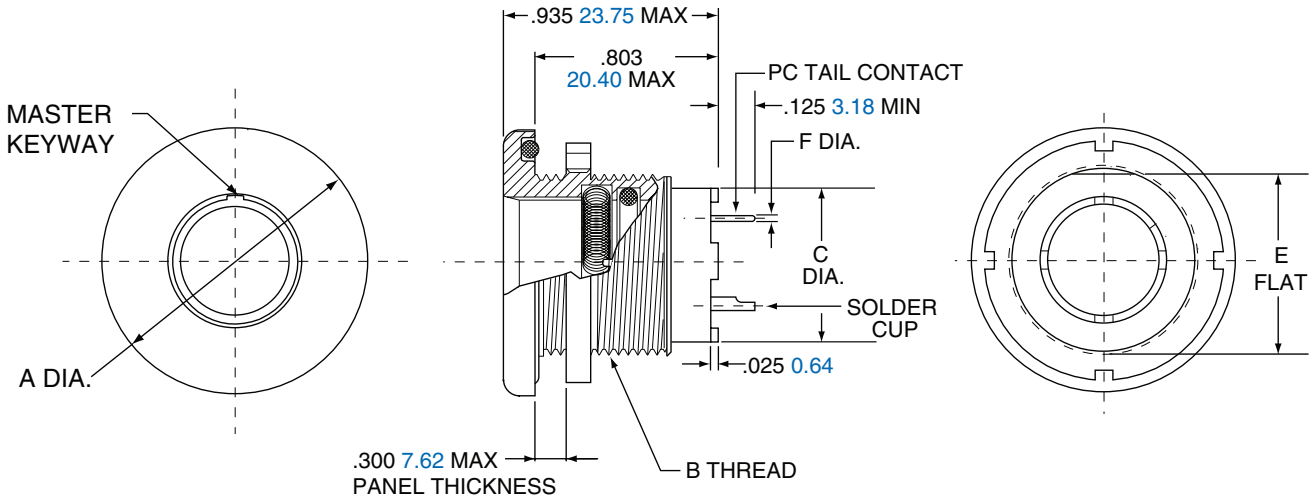

Shell Size	A Dia.		B Thread UN-2A	C Dia.		E Flat.		F PC Tail Dia.
	in.	mm.		in.	mm.	in.	mm.	
5	.830	21.08	.5000-32	.274	6.96	.470	11.94	**#23** .018/.022 0.46/0.56
6	.884	22.45	.5625-32	.329	8.36	.529	13.44	
7	.994	25.25	.6875-28	.431	10.95	.663	16.84	**#20/20HD** .025/.027 0.64/0.69
8	.994	25.25	.6875-28	.493	12.52	.663	16.84	
9	1.073	27.25	.7500-28	.551	14.00	.719	18.26	**#16** .060/.064 1.52/1.63
10	1.138	28.91	.8125-28	.619	15.72	.778	19.76	
12	1.338	33.99	1.0000-28	.703	17.86	.969	24.61	**#12** .092/.096 2.34/2.44
14	1.388	35.26	1.0625-20	.863	21.92	1.019	25.88	
15	1.453	36.91	1.1250-28	.913	23.19	1.113	28.27	

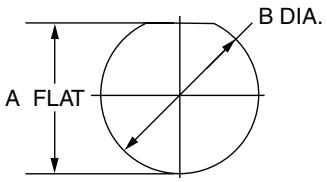

JAM NUT PANEL CUTOUT				
	A Flat		B Dia.	
Shell Size	in. ±.002	mm. ± 0.05	in. ±.005	mm. ± 0.13
5	.477	12.12	.510	12.95
6	.537	13.64	.635	16.13
7	.670	17.02	.635	16.13
8	.670	17.02	.698	17.73
9	.727	18.47	.760	19.30
10	.787	19.81	.885	22.48
12	.977	24.82	1.010	25.65
14	1.027	26.09	1.073	27.25
15	1.120	28.45	1.135	28.83

2M803

Bayonet

2M803 Series of Hermetic Receptacles provide superior sealing of 1x10-8 cc/ second helium leak rate and are 100% tested prior to shipping. This superior sealing is accomplished through the use of glass insulator fused to stainless steel shells and iron alloy contacts.

FEATURES:

- Low profile shells for minimum box protrusion
- Shell Standoffs for PC Board washout
- Non-removable PC and/or Solder cup contacts

2M803 Hermetic

Ordering Guide for 2M803-006 Receptacles

1.	2.	3.	4.	5.	6.
Series	Shell Size	Service Class	Shell Size-Insert Aggmt	Contacts	Keying
2M803-006	-07	Z1	6-7	P	A

Example Part Number

1. SERIES

Part #	Description
2M803-006	Hermetic Receptacles with PCB Contacts or Solder Cup Contacts

2. SHELL SIZE

Part #	Description
-02	Flange Mount
-07	Jam Nut

3. SERVICE CLASS

Material	Part #	Description	
Stainless Steel	Z1	Passivated	
	ZL	Electrolytic Nickel	

4. SHELL SIZE-INSERT ARRANGEMENT

See Table pg 53-55

Note: Please contact the factory directly for a listing of tooled interfacial seals for the hermetically sealed connectors.

Please note, Amphenol standard 2M hermetic connector are provided less the interfacial seal. Please contact the factory for availability on the interfacial seal.

5. CONTACTS

Part #	Description
P	Pin- Solder Cup
C	Pin-PC Tail
H	Pin, Solder Cup- Without Interfacial Seal
Y	Pin, PC Tail- Without Interfacial Seal

6. KEYING

Part #	A°	B°
N (NORMAL)	150°	210°
X	75°	210°
Y	95°	230°
Z	140°	275°

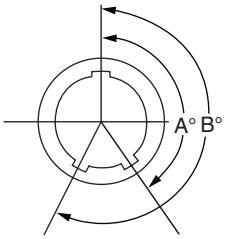

Receptacle View

2M803 Hermetic

Flange Mount and Jam Nut 2M803-006-02 and -07

Micro38999

2M803-006-02

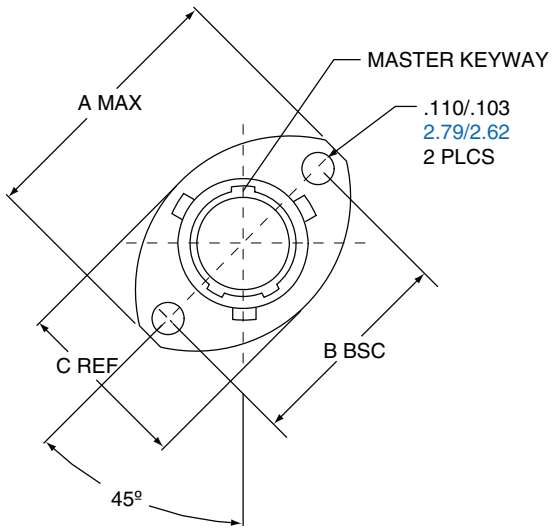

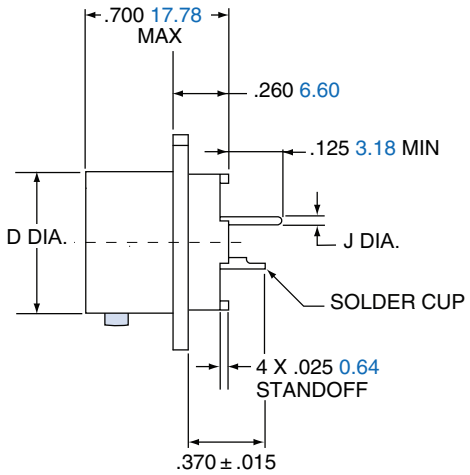

2M803-006-07

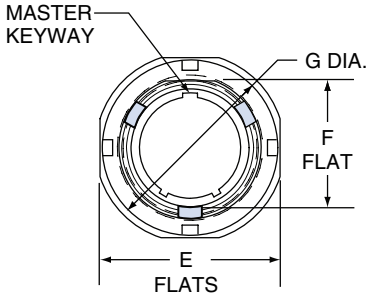

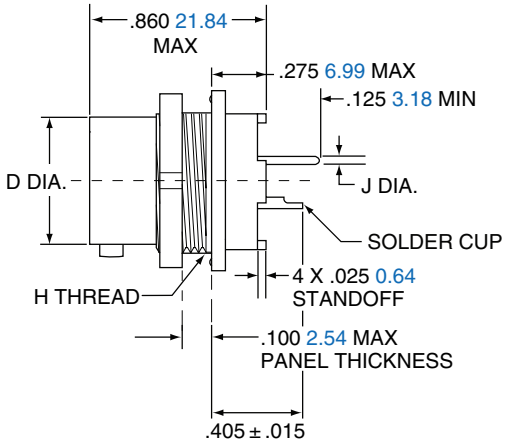

Shell Size	A Max.		B BSC.		C Ref.		D Dia.		E Flats		F Flat		G Dia.		H Thread	J PC Tail Dia.
	in.	mm	in.	mm.	in.	mm	in.	mm.	in.	mm.	in.	mm.	in.	mm.		
5	.710	18.03	.513	13.03	.460	11.68	.300	7.62	.545	13.84	.350	8.89	.575	14.61	.3750-32 UNEF-2A	**#23** .018/.022 0.46/0.56
6	.788	20.02	.598	15.19	.522	13.26	.362	9.19	.595	15.11	.410	10.42	.635	16.13	.4375-28 UNEF-2A	
7	.895	22.73	.708	17.98	.590	14.99	.436	11.07	.723	18.36	.536	13.61	.755	19.18	.5625-32 UN-2A	**#20/20HD** .025/.027 0.64/0.69
8	1.154	29.31	.964	24.49	.665	16.98	.500	12.70	.790	20.07	.593	15.10	.830	21.08	.6250-28 UN-2A	
9	1.210	30.73	1.017	25.83	.721	18.31	.561	14.25	.790	20.07	.596	15.14	.830	21.08	.6250-28 UN-2A	**#16** .060/.064 1.52/1.63
10	1.291	32.79	1.101	27.97	.795	20.19	.635	16.13	.925	23.51	.721	.721	.955	24.26	.7500-28 UN-2A	
12	1.395	35.43	1.204	30.58	.874	22.20	.714	18.14	1.044	26.52	.845	21.46	1.078	27.38	.8750-28 UN-2A	**#12** .092/.096 2.34/2.44
14	1.550	39.37	1.280	32.51	1.050	26.67	.865	21.97	1.230	31.24	1.022	25.96	1.264	32.11	1.0625-20 UN-2A	
15	N/A	N/A	N/A	N/A	N/A	N/A	.924	23.47	1.287	32.69	1.093	27.76	1.322	33.58	1.1250-28 UN-2A	

2M801
Dual-Start

2M801 Series of Hermetic Receptacles provide superior sealing of $1x10^{-8}$ cc/second helium leak rate and are 100% tested prior to shipping. This superior sealing is accomplished through the use of glass insulator fused to stainless steel shells and iron alloy contacts.

FEATURES:

- Low profile shells for minimum box protrusion
- Shell Standoffs for PC Board washout
- Non-removable PC and/or Solder cup contacts

2M801 Hermetic

Ordering Guide for Hermetic Receptacle 2M801-012

Micro38999

1.	2.	3.	4.	5.	6.
Series	**Shell Size**	**Service Class**	**Shell Size-Insert Aggmt**	**Contacts**	**Keying**
2M801-012	-02	Z1	6-7	P	A

Example Part Number

1. SERIES

Part #	Description
2M801-012	Hermetic Receptacles with Printed Circuit Board Contacts or Solder cup contacts

2. SHELL SIZE

Part #	Description
-02	Flange Mount
-03	Weld Mount (only available is Z1 finish)
-07	Jam Nut

3. SERVICE CLASS

Material	Part #	Description	RoHS
Stainless Steel	**Z1**	Passivated	✓
	ZL	Electrolytic Nickel	✓
	ZB	Stainless Steel with Olive Drab Cadmium Finish	

4. SHELL SIZE-INSERT ARRANGEMENT

See Table pg 53-55

5. CONTACTS

Part #	Description
P	Pin- Solder Cup
C	Pin-PC Tail
H	Pin, Solder Cup- Without Interfacial Seal
Y	Pin, PC Tail- Without Interfacial Seal

6. KEYING

Part #	A°	B°
A (NORMAL)	150°	210°
B	75°	210°
C	95°	230°
D	140°	275°
E	75°	275°
F	95°	210°

Note: Please contact the factory directly for a listing of tooled interfacial seals for the hermetically sealed connectors.

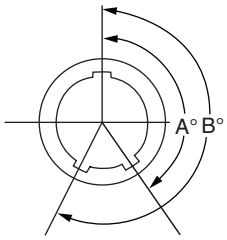

Receptacle View

2M801 Hermetic

Hermetic Jam Nut Connector 2M801-012-07

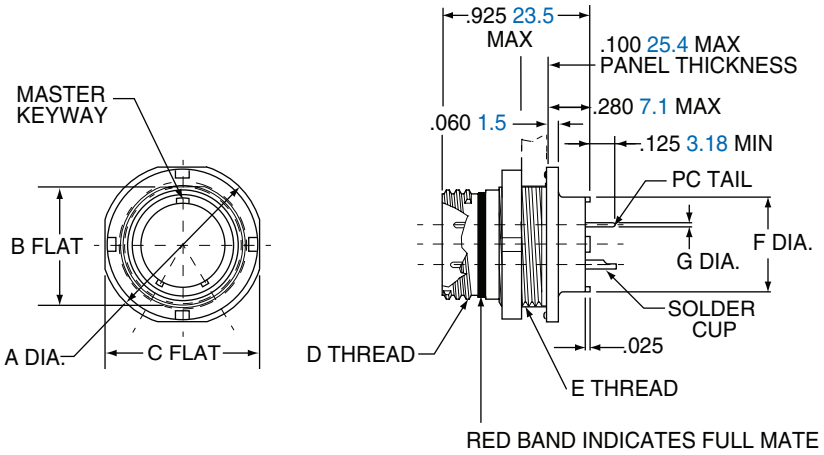

Shell Size	A Dia.		B Flat		C Flat		D Thread	UN-2A E Thread	F Dia.		G Dia. Tail Dia.
	in.	mm.	in.	mm.	in.	mm.			in.	mm.	
5	.575	14.61	.350	8.89	.545	13.84	.3125-.05P-.1L-2A	.3750-28	.244	6.20	**#23** .018/.022 0.46/0.56
6	.635	16.13	.410	10.41	.595	15.11	.3750-.05P-.1L-2A	.4375-28	.330	8.38	
7	.755	19.18	.536	13.61	.723	18.36	.4375-.05P-.1L-2A	.5625-32	.432	10.97	**#20/20HD** .024/.028 0.64/0.69
8	.755	19.18	.536	13.61	.723	18.36	.5000-.05P-.1L-2A	.5625-32	.493	12.52	
9	.830	21.08	.596	15.14	.790	20.07	.5625-.05P-.1L-2A	.6250-28	.551	14.00	
10	.890	22.61	.658	16.71	.855	21.72	.6250-.05P-.1L-2A	.6875-28	.620	15.75	**#16** .060/.064 1.52/1.63
13	1.078	27.38	.845	21.46	1.044	26.52	.8125-.1P-.2L-2A	.8750-28	.703	17.86	
16	1.264	32.11	1.022	25.96	1.230	31.24	1.0000-.1P-.2L-2A	1.0625-20	.863	21.92	**#12** .092/.096 2.34/2.44
17	1.325	33.66	1.096	27.84	1.290	32.77	1.0625-.1P-.2L-2A	1.125-28	.912	23.16	
21	1.625	41.28	1.345	34.16	1.577	40.06	1.3125-.1P-.2L-2A	1.375-28	1.170	29.72	

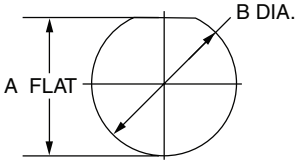

PANEL CUTOUT				
Shell Size	A Flat		B Dia.	
	in. ±.002	mm. ± 0.05	in. ±.002	mm. ± 0.05
5	.356	9.04	.385	9.78
6	.416	10.57	.447	11.35
7	.542	13.77	.572	14.53
8	.542	13.77	.572	14.53
9	.602	15.29	.635	16.13
10	.666	16.92	.697	17.70
13	.851	21.62	.885	22.48
16	1.028	26.11	1.075	27.31
17	1.102	27.99	1.135	28.83
21	1.354	34.39	1.385	35.18

2M801 Dual-Start ACME Threads

Hermetic Square Flange Connector 2M801-012-02

Micro38999

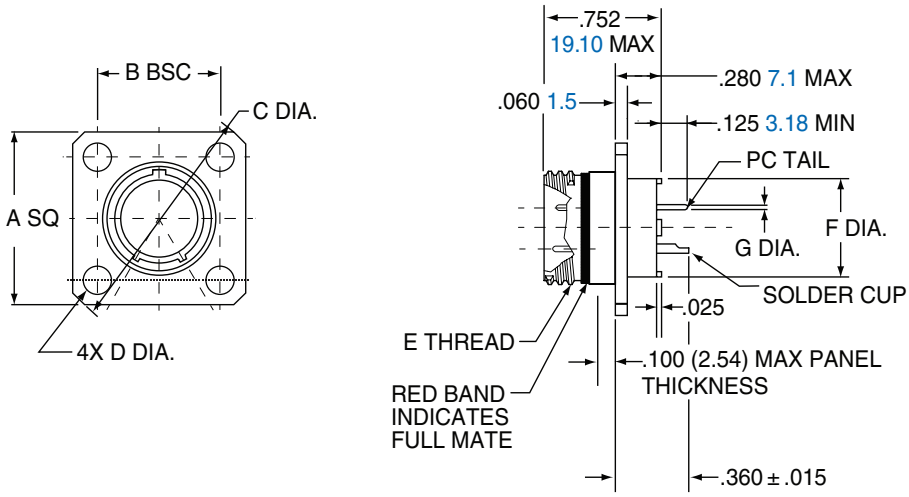

Shell Size	A SQ.		B BSC		C Dia.		D Dia.		E Thread	F Dia.		G. Dia. Tail Dia.
	in.	mm.	in.	mm.	in.	mm.	in. ±.003	mm. ± 0.08		in.	mm.	
5	.530	13.46	.363	9.22	.680	17.27	.093	2.36	.3125-.05P-.1L-2A	.244	6.20	**#23** .018/.022 0.46/0.56
6	.590	14.99	.423	10.74	.750	19.05	.093	2.36	.3750-.05P-.1L-2A	.330	8.38	
7	.650	16.51	.483	12.27	.850	21.59	.093	2.36	.4375-.05P-.1L-2A	.432	10.97	**#20/20HD** .025/.027 0.64/0.69
8	.712	18.08	.545	13.84	.938	23.83	.093	2.36	.5000-.05P-.1L-2A	.493	12.52	
9	.850	21.56	.607	15.42	1.125	28.58	.128	3.25	.5625-.05P-.1L-2A	.551	14.00	
10	.890	22.61	.670	17.02	1.188	30.18	.128	3.25	.6250-.05P-.1L-2A	.620	15.75	**#16** .060/.064 1.52/1.63
13	1.030	26.16	.812	20.62	1.375	34.93	.128	3.25	.8125-.1P-.2L-2A	.703	17.86	
16	1.219	31.96	.981	24.92	1.625	41.28	.128	3.25	1.0000-.1P-.2L-2A	.863	21.92	**#12** .092/.096 2.34/2.44
17	1.280	32.51	1.060	26.92	1.700	43.18	.128	3.25	1.0625-.1P-.2L-2A	.912	23.16	
21	1.430	36.32	1.205	30.61	1.940	49.28	.128	3.25	1.3125-.1P-.2L-2A	1.170	29.72	

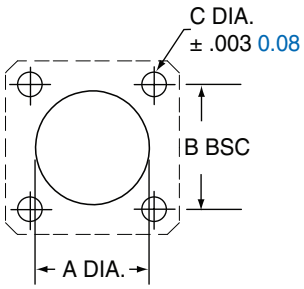

PANEL CUTOUT						
Shell Size	A Dia.		B BSC		C Dia.	
	in.	mm.	in.	mm.	in.	mm.
5	.330	8.38	.363	9.22	.093	2.36
6	.390	9.91	.423	10.74	.093	2.36
7	.450	11.43	.483	12.27	.093	2.36
8	.510	12.95	.545	13.84	.093	2.36
9	.575	14.61	.607	15.42	.128	3.25
10	.640	16.26	.670	17.02	.128	3.25
13	.825	20.96	.812	20.65	.128	3.25
16	1.015	25.78	.981	24.92	.128	3.25
17	1.075	27.31	1.060	26.92	.128	3.25
21	1.325	33.66	1.205	30.61	.128	3.25

2M801 Dual-Start ACME Threads

Hermetic Weld Mount Connector 2M801-012-03

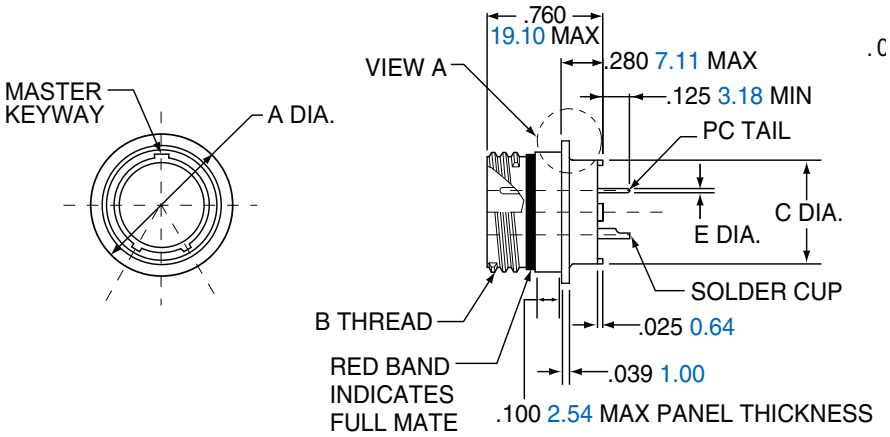

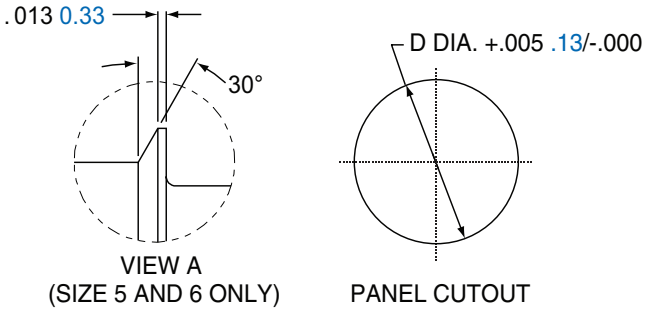

Shell Size	A Dia		B Thread	C Dia.		D Dia. Panel Cutout		G. PC Tail Dia.
	in.	mm.		in.	mm.	in.	mm.	
5	.395	10.03	.3125-.05P-.1L-2A	.244	6.20	.319	8.10	**#23** .018/.022 0.46/0.56
6	.455	11.56	.3750-.05P-.1L-2A	.330	8.38	.379	9.55	
7	.520	13.21	.4375-.05P-.1L-2A	.432	11.97	.438	11.13	**#20/20HD** .024/.028 0.64/0.69
8	.580	14.73	.5000-.05P-.1L-2A	.493	12.52	.502	11.13	
9	.645	16.38	.5625-.05P-.1L-2A	.551	14.00	.563	14.30	**#16** .060/.064 1.52/1.63
10	.705	18.01	.6250-.05P-.1L-2A	.620	15.75	.627	11.13	
13	.895	22.73	.8125-.1P-.2L-2A	.703	17.86	.814	20.68	
16	1.080	27.43	1.0000-.1P-.2L-2A	.863	21.92	1.007	25.58	**#12** .092/.096 2.34/2.44
17	1.145	29.08	1.0625-.1P-.2L-2A	.912	23.16	1.067	27.10	
21	1.395	35.43	1.3125-.1P-.2L-2A	1.170	29.72	1.320	33.53	

83723
Pyle

The Amphenol MIL-DTL-83723, Series III family of connectors includes styles from Pyle National. These have proven technology for severe environments and are widely used in commercial and military aerospace markets. Amphenol/Pyle 83723 connectors incorporate many advantageous features, such as a unique threaded coupling mechanism that provides greater resistance to decoupling. This coupling mechanism eliminates the need for safety wiring and tends to couple during vibration - thus offering the user added assurance and a margin of safety.

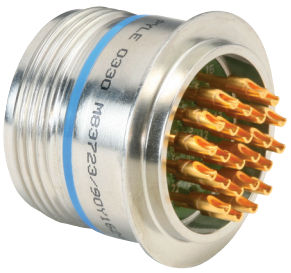

FEATURES:

- **Hermetic**
  Hermetic styles are available in threaded receptacles with solderwell or flat eyelet termination. PC Tail Designs are available on request.
- **Environmental**
  Designed for environmental moisture sealing with fused compression glass sealed inserts
- **High Temperature Hermetics**
  200°C and 260°C Firewall

MIL-DTL-83723, Series III, Pyle®

Manufacturer's Specifications

The Amphenol/Pyle® Product line of MIL-DTL-83723*, Series III Connectors was developed for the higher operating temperatures inherent in today's high performance aircraft and aircraft engines.

THESE CONNECTORS MEET THE PERFORMANCE REQUIREMENTS OF THE FOLLOWING MANUFACTURER'S SPECIFICATIONS:

- European: ASD† EN2997
- Rolls Royce/SBAC: ESC10

HERMETIC CONNECTOR PERFORMANCE CHARACTERISTICS	
Thermal Shock	No damage detrimental to the operation of the connector occurs when subjected to 10 cycles of thermal shock from 0°C to 90°C and back to 0°C.
Physical Shock (Mated)	300 G's
Moisture Resistance (Mated)	500 Megohms
Insulation Resistance, High Temp. (Mated)	500 Megohms
Corrosion (Unmated)	Complies with MIL-DTL-83723 Req.
Temperature Life	Fully functional for 1000 hours at 200°C (392°F) ambient. Internal temperature 238°C (460°F).
Air Leakage (Unmated)	Less than .01 micron per cubic feet per hour on application of 15 PDS pressure differential across the connector.
Altitude Immersion (Mated)	After 3 cycles immersed in salt water with pressure reduced to 1 in. Hg (75,000 ft. altitude) for 30 minutes and returned to atmosphere pressure. While connectors submerged insulation resistance should remain 1000 megohms minimum and support 1500 volts RMS applied without flash-over or breakdown.
High Potential Voltage Altitude (Unmated)	When tested in accordance with MIL-STD-202, Method 301, no flash-over or breakdown under simulated altitude conditions as shown: **Altitude/Service Rating I** 50,000 ..... 500 AC-RMS 70,000 ..... 375 AC-RMS 110,000 ..... 200 AC-RMS

* BACC63CM supersedes BACC63BR and BACC63CN supersedes BACC63BT.
† ASD supersedes AECMA

AMPHENOL AEROSPACE OFFERS THE PYLE® PRODUCT LINE OF MIL-DTL-83723*, SERIES III CONNECTORS.

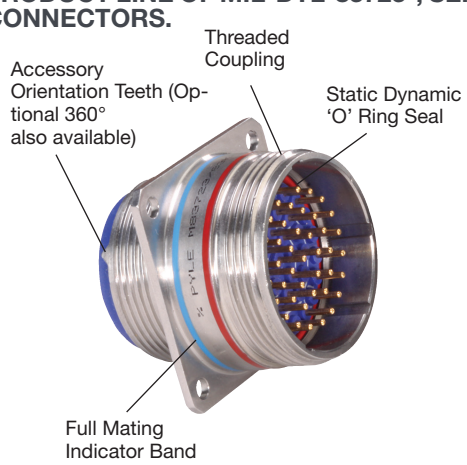

DESIGN FEATURES (THREADED STYLE SHOWN)

The Amphenol MIL-DTL-83723, Series III family of connectors includes styles from Pyle National. These have proven technology for severe environments and are widely used in commercial and military aerospace markets.

Amphenol/Pyle 83723 Series III high temperature styles are capable of operation at 260° C/500°F.

The Pyle 83723 family provides hermetic class that exceed the most stringent specification requirements.

HERMETIC STYLE CONNECTORS

- Hermetic styles are available in threaded receptacles with solderwell or flat eyelet termination. PC Tail Designs are available on request.
- Designed for environmental moisture sealing with fused compression glass sealed inserts
- High temperature hermetics 200°C and 260°C Firewall

SERVICE RATINGS

Service Rating	Recommended Operating AC Voltage at Sea Level	Test Voltage AC (RMS), 60 cps			
		Sea Level	50,000 ft.	70,000 ft.	110,000 ft.
I	600	1,500	500	375	200

Please note that the electrical data given is not an establishment of electrical safety factors. This is left entirely in the designer's hands as he can best determine which peak voltage, switching surges, transients, etc. can be expected in a particular circuit.

MIL-DTL-83723, Series III, Pyle®

Hermetic Receptacles, cont. - Quick Reference

Amphenol Commercial Air

MIL-DTL-83723, SERIES III HERMETIC SOLDER MOUNT/WELD MOUNT RECEPTACLE, THREADED COUPLING

MILITARY	
M83723/90Y	Stainless Steel, Class Y, Solderwell contacts
M83723/90P	Stainless Steel, Class P, Eyelet contacts

COMMERCIAL	
BTY-14	Stainless Steel, 'O' ring Seal, Solderwell or Eyelet contacts, 200°C or 260°C
BFY-14	Stainless Steel, Static Dynamic Seal, Solderwell or Eyelet contacts, 200°C or 260°C
BNY-14	Stainless Steel, Static Dynamic Seal, Electro-deposited Nickel, Solderwell or Eyelet contacts, 200°C or 260°C
COMMERCIAL ASD	
EN2997YI/ YE1	Meets ASD Specifications, Stainless Steel, Class Y (200°C) / Class YE (260°C), Solderwell contacts
COMMERCIAL ROLLS ROYCE STANDARDS	
ESC10YE1	260°C Firewall, Stainless Steel, Class YE, Solderwell contacts
ESC11YE1	260°C Firewall, Stainless Steel, Class YE, Solderwell contacts, Scoop-proof Recessed pins
PCB Tails available upon request	

SERVICE CLASSES HERMETIC MILITARY AND COMMERCIAL

HERMETIC	
Y	Stainless steel, 200°C, hermetic with solderwell contacts
P	Stainless steel, 200°C, hermetic with eyelet contacts
YE	Stainless steel, high temp. (260°C) firewall capability, hermetic with solderwell contacts

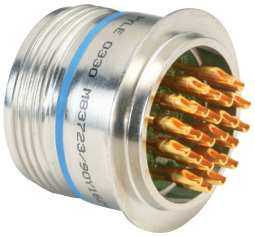

HERMETIC SOLDER MOUNT/WELD MOUNT RECEPTACLE, THREADED

Commercial BTY, BFY and BNY meet European specifications and General Electric spec. GEM50TF3564, Classes A & B.
Shell sizes 20, 24 and 28, consult Amphenol Aerospace for availability. Hermetic style receptacles are not included in Boeing designations.

MIL-DTL-83723, Series III, Pyle®

Hermetic Receptacles - Quick Reference

MIL-DTL-83723, SERIES III, HERMETIC SQUARE FLANGE RECEPTACLE, THREADED COUPLING

MILITARY	
M83723/88Y	Stainless Steel, Class Y, Solderwell contacts
M83723/88P	Stainless Steel, Class P, Eyelet contacts

COMMERCIAL	
BTY-17	Stainless Steel, 'O' ring Seal, Solderwell or Eyelet contacts, 200°C or 260°C
BFY-17	Stainless Steel, Static Dynamic Seal, Solderwell or Eyelet contacts, 200°C or 260°C
BNY-17	Stainless Steel, Static Dynamic Seal, Electro-deposited Nickel, Solderwell or Eyelet contacts, 200°C or 260°C
COMMERCIAL ASD	
EN2997Y0 / YE0	Meets ASD Specifications, Stainless Steel, Class Y (200°C) / Class YE (260°C), Solderwell contacts
COMMERCIAL ROLLS ROYCE STANDARDS	
ESC10YE2	260°C Firewall, Stainless Steel, Class YE, Solderwell contacts
ESC10YE2	260°C Firewall, Stainless Steel, Class YE, Solderwell contacts, Scoop-proof Recessed pins
PCB Tails available upon request	

MIL-DTL-83723, SERIES III, HERMETIC JAM NUT RECEPTACLE, THREADED COUPLING

MILITARY	
M83723/89Y	Stainless Steel, Class Y, Solderwell contacts
M83723/89P	Stainless Steel, Class Y, Eyelet contacts

COMMERCIAL	
BTY-19	Stainless Steel, 'O' ring Seal, Solderwell or Eyelet contacts, 200°C or 260°C
BFY-19	Stainless Steel, Static Dynamic Seal, Electro-deposited Nickel, Solderwell or Eyelet contacts, 200°C or 260°C
BNY-19	Stainless Steel, Static Dynamic Seal, Electro-deposited Nickel, Solderwell or Eyelet contacts, 200°C or 260°C
COMMERCIAL ASD	
EN2997Y7 / YE7	Meets ASD Specifications, Stainless Steel, Class Y (200°C) / Class YE (260°C), Solderwell contacts
COMMERCIAL ROLLS ROYCE STANDARDS	
ESC10YE3	260°C Firewall, Stainless Steel, Class YE, Solderwell contacts
ESC11YE3	260°C Firewall, Stainless Steel, Class YE, Solderwell contacts, Scoop-proof Recessed pins
PCB Tails available upon request	

SERVICE CLASSES HERMETIC MILITARY AND COMMERCIAL

HERMETIC	
Y	Stainless Steel, 200°C, hermetic with solderwell contacts
P	Stainless steel, 200°C, hermetic with eyelet contacts
YE	Stainless steel, high temp. (260°C) firewall capability, hermetic with solderwell contacts

HERMETIC SQUARE FLANGE RECEPTACLE, THREADED

HERMETIC JAM NUT RECEPTACLE, THREADED

Commercial BTY, BFY and BNY meet European specifications and General Electric spec. GEM50TF3564, Classes A & B.

Shell sizes 20, 24 and 28, consult Amphenol Aerospace for availability.
Hermetic style receptacles are not included in Boeing designations.

INSERT ARRANGEMENTS

Shell Size/ Insert Arrangement	Service Rating	Total Contacts	Contact Size			
			8	12	16	20
08-03	I	3				3
08-98	I	3				3
10-02**	I	2				2
10-05	I	5				5
10-06	I	6				6
10-20	I	2			2	
12-03***	I	3			3	
12-12	I	12				12
14-04***	I	4		4		
14-07***	I	7			7	
14-12	I	12			3	9
14-15	I	15				15
16-10***	I	10			10	
16-24	I	24				24
18-08	I	8		8		
18-14***	I	14			14	
18-31	I	31				31

† Not an MS layout.
* Special - consult Amphenol for availability.
** Special Pyle with Matrix 83723 insert (ESC10 type, EN2997 Spec); consult Amphenol Aerospace for availability. Size 8 and Size 12 cavities can accommodate Twinax or Coax contacts; consult Amphenol for information. Sizes 20, 24 and 28 Hermetic; consult Amphenol Aerospace for availability.

ALTERNATE KEYING POSITIONS (ROTATION OF KEY/KEYWAY OF SHELL)

To avoid cross-plugging problems in applications requiring the use of more than one connector of the same size and arrangement, alternate keying positions are available as indicated in the chart below. The diagram shows the engaging view of a receptacle shell with keyways. The insert is rotated counter-clockwise relative to the center-line. Plug shells would be the opposite of this diagram.

In the "Normal insert position" (position N), the insert center line coincides with the center-line of the master key/keyway of the shell. In the "alternate keying positions" (positions 6, 7, 8, 9 and Y), the minor keys/keyways are positioned with reference to master key/keyway as indicated in the keying position table.

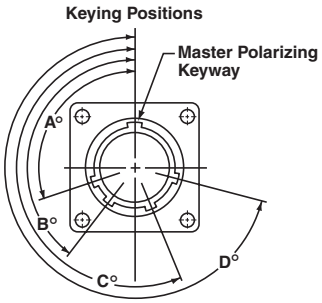

Shown is Engaging Face View of Receptacle Shell with Keyways (Plug Shell Keys would be Opposite)

ALTERNATE KEYING POSITIONS OF SHELL

Shell Size	Polarizing Position	Key/Keyway Positions			
		A°	B°	C°	D°
8 thru 24	N	105	140	215	265
8 & 10	6	102	132	248	320
	7	80	118	230	312
	8	35	140	205	275
	9	64	155	234	304
10 only	Y††	25	115	220	270
12, 14, 16, 18, 20, 22, 24 and 28	6	18	149	192	259
	7	92	152	222	342
	8	84	152	204	334
	9	24	135	199	240
	Y††	98	152	268	338

ESC 11 (HTK SERIES) ONLY

Shell Size	Polarizing Position	Key/Keyway Positions			
		A°	B°	C°	D°
14 thru 24	N	95	145	220	255
	6	101	168	211	342
	7	18	138	208	268
	8	26	156	208	276
	9	120	161	225	336

†† Position Y supersedes inactive positions 10 and Z designations. Ref. MIL-STD-1554.

MIL-DTL-83723, Series III, Pyle®

Insert Arrangements

Front face of pin insert or rear face of socket insert illustrated

Insert Arrangement	08-03	08-98	10-02**	10-05	10-06	10-20	12-03***	12-12
Service Rating	I	I	I	I	I	I	I	I
Number of Contacts	3	3	2	5	6	2	3	12
Contact Size	20	20	20	20	20	16	16	20

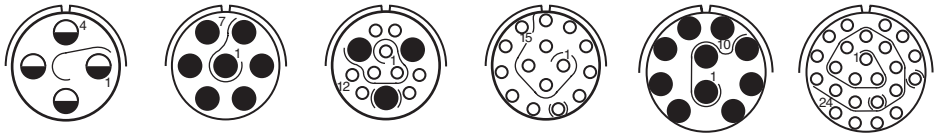

Insert Arrangement	14-04***	14-07***	14-12**		14-15	16-10***	16-24
Service Rating	I	I	I		I	I	I
Number of Contacts	4	7	9	3	15	10	24
Contact Size	12	16	20	16	20	16	20

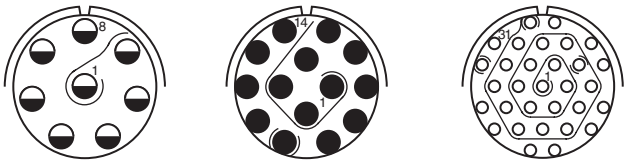

Insert Arrangement	18-08	18-14***	18-31
Service Rating	I	I	I
Number of Contacts	8	14	31
Contact Size	12	16	20

†Not an MS layout.
*Special - consult Amphenol Aerospace for availability.
** Special Pyle with Matrix 83723 insert (ESC10 type, EN2997 Spec); consult Amphenol Aerospace for availability.
Size 8 and Size 12 cavities can accommodate Twinax or Coax contacts; consult Amphenol Aerospace for information.
Sizes 20, 24 and 28 Hermetic; consult Amphenol Aerospace for availability.

CONTACT LEGEND 20 16 12 8

MIL-DTL-83723, Series III, Pyle®

How to Order – Hermetic, Military or Pyle Commercial

Amphenol Commercial Air

MILITARY HERMETIC

1. Connector Type	2. Connector Style and Contact Type (Crimp)	3. Service Class	4. Shell Size/ Insert Arrangement	5. Alternate Keying Position of Shell
M83723	/88	Y	16-24	6

COMMERCIAL HERMETIC

1. Connector Style	2. Shell Style	3. Shell Size/ Insert Arrangement	4. Contact Type	5. Contact Style	6. Alternate Contact Finish	7. Alternate Keying Position of Shell	8. Varia-tions
BTY	-17	16-24	P	1	D	06	XXXX

1. MILITARY CONNECTOR TYPE

M83723	Designates MIL-DTL-83723 Series III Connectors

2. MILITARY HERMETIC CONNECTOR STYLE

/88	Hermetic, Threaded Square Flange Receptacle
/89	Hermetic, Threaded Jam Nut (D-Hole Mount) Receptacle
/90	Hermetic, Threaded Solder Mounted Receptacle

3. SERVICE CLASS

Y	Hermetic, Stainless Steel, 200°C, with Solderwell Contacts
H	Hermetic, Tin Plated Carbon Steel, 150° C

For availability of a Plated Steel Shell, consult Amphenol Aerospace.

4. SHELL SIZE & INSERT ARRANGEMENT

Page 78	First number represents Shell Size, second number is the Insert Arrangement

5. ALTERNATE KEYING POSITION - ROTATION

Page 77	Use N for normal. Use 6, 7, 8, 9 or Y for alternate keying positions. See page 77 for descriptions.

1. COMMERCIAL HERMETIC CONNECTOR STYLE

BTY	Hermetic, Threaded, Stainless Steel, with 'O' ring seal
BFY	Hermetic, Threaded, Stainless Steel, Static/Dynamic Seal
BNY	Hermetic, Threaded, Stainless Steel, Electro-deposited Nickel plated, with Static/Dynamic Seal

2. SHELL STYLE

-17	Square Flange Receptacle
-19	Jam Nut (D-Hole Mount) Receptacle
-14	Solder Mounted Receptacle

3. SHELL SIZE & INSERT ARRANGEMENT

Page 78	First number represents Shell Size, second number is the Insert Arrangement

4. CONTACT TYPE

P	Pin Contacts

5. CONTACT STYLE

1	Solderwell Contacts (Mil-Spec Type)
4	Eyelet Contacts

6. ALTERNATE CONTACT FINISH

D	.000050 (per MIL-DTL-83723, III) Gold
V	.000100 Gold

7. ALTERNATE KEYING POSITION - ROTATION

Page 77	Use N for normal. Use 6, 7, 8, 9 or Y for alternate keying positions. See page 77 for descriptions.

8. VARIATIONS

Y144	260°C Capability (Euro Market)
Y163	200°C Capability (Euro Market)
Y186	260°C Capability per G.E. M50TF3564, Class B
Y188	200°C Capability per G.E. M50TF3564, Class A

Hermetic Square Flange Mount Receptacle, Threaded Coupling

Military (MS83723/88), Commercial (BTY, BFY, BNY)

QUICK REFERENCE Page 75-76
PART NUMBER BUILDER Page 79

MILITARY	COMMERCIAL
M83723/88Y	BTY/BFY/BNY-17
M83723/88P	EN2997Y0 / YE0
	ESC10YE2
	ESC11YE2

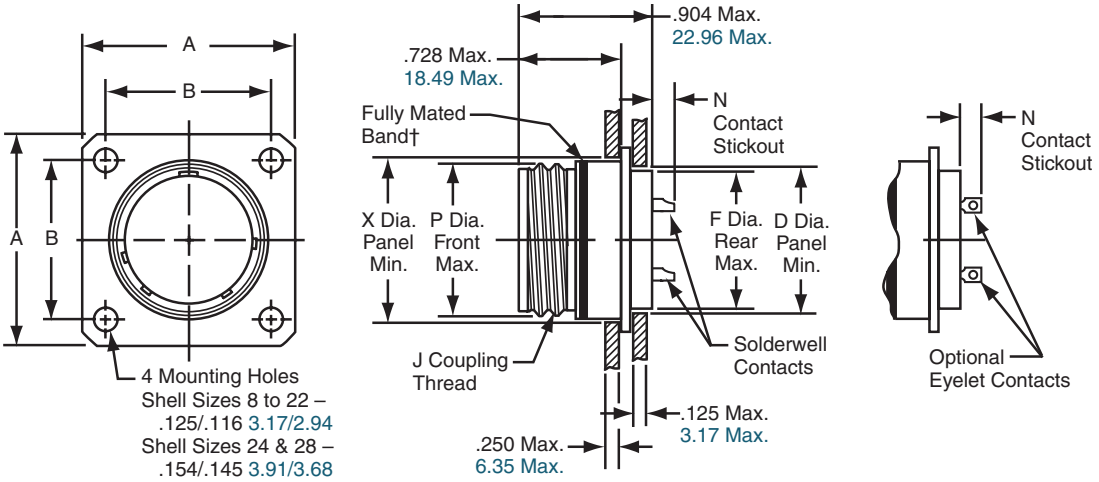

† When fully mated with plug, this band will be covered.
(Band is red on military types; can be red or blue on commercial types).

Inches

Shell Size	A ±.010	B ±.005	D Dia. Panel Min.	F Dia. Rear Max.	J Coupling Thread Class 2A	N Contact Stickout		P Dia. Front Max.	X Dia. Panel Min.
						Size 20 Contacts	Size 12 & 16 Contacts		
8	.812	.594	.510	.500	.5625-24 UNF	.194 / .134	.224 / .164	.562	.572
10	.937	.719	.635	.625	.6875-24 UNEF	.194 / .134	.224 / .164	.696	.706
12	1.031	.812	.760	.750	.8750-20 UNEF	.194 / .134	.224 / .164	.875	.885
14	1.125	.906	.885	.875	.9375-20 UNEF	.194 / .134	.224 / .164	.936	.946
16	1.250	.969	1.010	1.000	1.0625-18 UNEF	.194 / .134	.224 / .164	1.062	1.072
18	1.343	1.062	1.072	1.062	1.1875-18 UNEF	.194 / .134	.224 / .164	1.187	1.197
22	1.562	1.250	1.322	1.312	1.4375-18 UNEF	.194 / .134	.224 / .164	1.437	1.447

Millimeters

Shell Size	A ±.25	B ±.13	D Dia. Panel Min.	F Dia. Rear Max.	P Dia. Front Max.	X Dia. Panel Min.
8	20.62	15.09	12.95	12.70	14.27	15.75
10	23.80	18.26	16.13	15.88	17.68	18.99
12	26.19	20.62	19.30	19.05	22.23	23.19
14	28.58	23.01	22.48	22.23	23.77	24.89
16	31.75	24.61	25.65	25.40	26.97	28.12
18	34.11	26.97	27.23	26.97	30.15	30.71
22	39.67	31.75	33.58	33.32	36.50	36.88

Commercial hermetics meet some European and GE specifications.
Hermetic styles are threaded coupling only.
Shell sizes 20, 24 and 28, consult Amphenol for availability.
All dimensions for reference only.

Hermetic Jam Nut (D-Hole Mount) Receptacle, Threaded Coupling

Military (MS83723/89), Commercial (BTY, BFY, BNY)

QUICK REFERENCE Page 75-76
PART NUMBER BUILDER Page 79

MILITARY	COMMERCIAL
M83723/89Y	BTY, BFY, BNY-19
M83723/89P	EN2997Y7, YE7
	ESC10YE3
	ESC11YE3

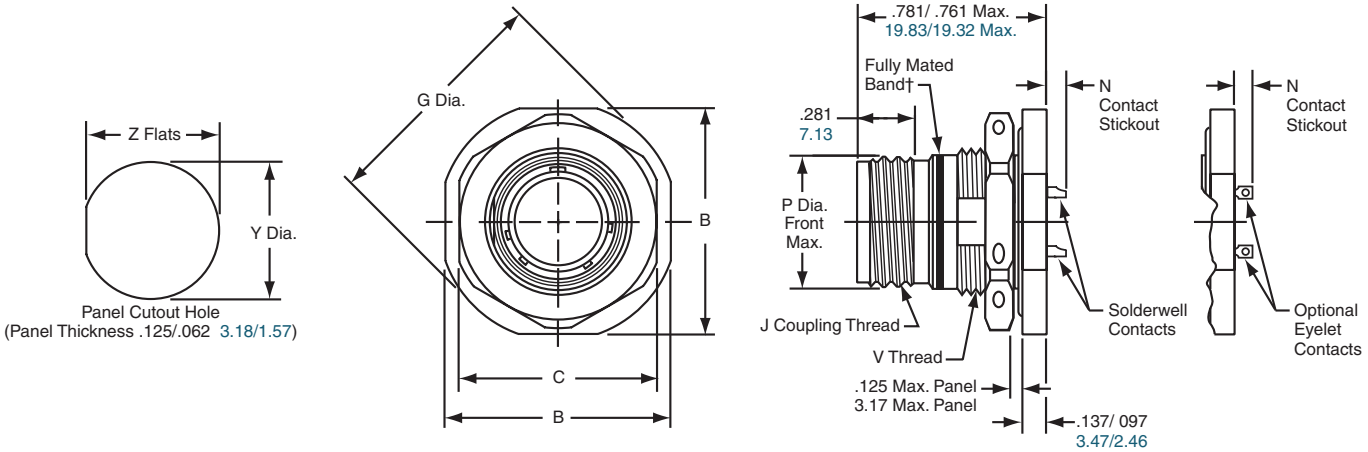

† When fully mated with plug,this band will be covered.
(Band is red on military types; can be red or blue on commercial types).

Inches

Shell Size	B Flats Max.	C Hex Max.	G Dia. Max.	J Coupling Thread Class 2A	N Contact Stickout		P Dia. Front Max.	V Thread Class 2A	Y Dia. ±.005	Z Flats ±.005
					Size 20 Contacts	Size 12 & 16 Contacts				
8	.980	.828	1.068	.5625-24 UNF	.180 / .120	.210 / .150	.562	.6250-20 UNF	.635	.605
10	1.104	.953	1.192	.6875-24 UNEF	.180 / .120	.210 / .150	.696	.7500-20 UNEF	.760	.730
12	1.291	1.140	1.380	.8750-20 UNEF	.180 / .120	.210 / .150	.875	.9380-20 UNEF	.947	.917
14	1.391	1.205	1.505	.9375-20 UNEF	.180 / .120	.210 / .150	.936	1.0000-20 UNEF	1.010	.980
16	1.516	1.329	1.630	1.0625-18 UNEF	.180 / .120	.210 / .150	1.062	1.1250-18 UNEF	1.135	1.105
18	1.641	1.455	1.756	1.1875-18 UNEF	.180 / .120	.210 / .150	1.187	1.2500-18 UNEF	1.260	1.225
22	1.954	1.705	2.068	1.4375-18 UNEF	.180 / .120	.210 / .150	1.437	1.5000-18 UNEF	1.510	1.475

Millimeters

Shell Size	B Flats Max.	C Hex Max.	G Dia. Max.	N Contact Stickout		P Dia. Front Max.	Y Dia. ±.13	Z Flats ±.13
				Size 20 Contacts	Size 12 &16 Contacts			
8	24.89	21.03	27.13	4.57 / 3.05	5.33 / 3.81	14.27	16.13	15.37
10	28.04	24.21	30.28	4.57 / 3.05	5.33 / 3.81	17.68	19.30	18.54
12	32.79	28.96	35.05	4.57 / 3.05	5.33 / 3.81	22.23	24.05	23.29
14	35.33	30.61	38.23	4.57 / 3.05	5.33 / 3.81	23.77	25.65	24.89
16	38.51	33.76	41.40	4.57 / 3.05	5.33 / 3.81	26.97	28.83	28.07
18	41.68	36.96	44.60	4.57 / 3.05	5.33 / 3.81	30.15	32.00	31.12
22	49.63	43.31	52.53	4.57 / 3.05	5.33 / 3.81	36.47	38.35	37.47

Commercial hermetics meet some European and GE specifications. Hermetic styles are threaded coupling only.

Shell sizes 20, 24 and 28, consult Amphenol for availability.
All dimensions for reference only.

Hermetic Solder/Weld Mount Receptacle, Threaded Coupling

Military (M83723/90), Commercial (BTY, BFY, BNY)

QUICK REFERENCE Page 75-76
PART NUMBER BUILDER Page 79

Hermetically sealed receptacles have fused compression glass sealed inserts which provide envionrmental moisture sealing. There are three hermetic styles within the PT bayonet series.

MILITARY	COMMERCIAL
M83723/90Y	BTY/BFY/BNY-14
M83723/90P	EN2997Y1 / YE1
	ESC10YE1
	ESC11YE1

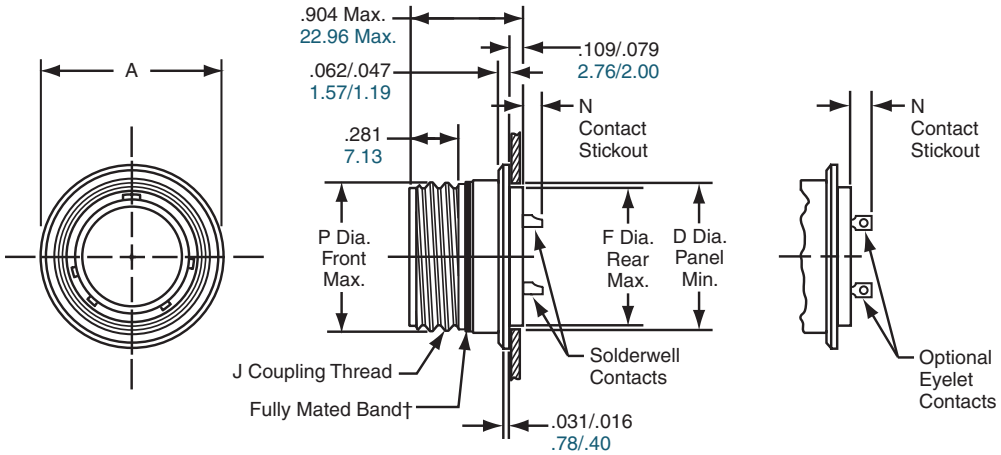

† When fully mated with plug this band will be covered.
(Band is red on military types; can be red or blue on commercial types).

Inches

Shell Size	A Dia. ±.010	D Dia. Panel Min.	F Dia. Rear Max.	J Coupling Thread Class 2A	N Contact Stickout		P Dia. Front Max.
					Size 20 Contacts	Size 12 & 16 Contacts	
8	.713	.510	.500	.5625-24 UNF	.194 / .134	.224 / .164	.562
10	.840	.572	.562	.6875-24 UNEF	.194 / .134	.224 / .164	.696
12	1.045	.760	.750	.8750-20 UNEF	.194 / .134	.224 / .164	.875
14	1.090	.822	.812	.9375-20 UNEF	.194 / .134	.224 / .164	.936
16	1.210	.947	.937	1.0625-18 UNEF	.194 / .134	.224 / .164	1.062
18	1.340	1.072	1.062	1.1875-18 UNEF	.194 / .134	.224 / .164	1.187
22	1.562	1.322	1.312	1.4375-18 UNEF	.194 / .134	.224 / .164	1.437

Millimeters

Shell Size	A Dia. ±.25	D Dia. Panel Min.	F Dia. Rear Max.	P Dia. Front Max.
8	18.11	12.95	12.70	14.27
10	21.34	14.53	14.27	17.68
12	26.54	19.30	19.05	22.23
14	27.69	20.88	20.62	23.77
16	30.73	24.05	23.80	26.97
18	34.04	27.23	26.97	30.15
22	39.67	33.58	33.32	36.50

Commercial hermetics meet some European and GE specifications. Hermetic styles are threaded coupling only.

Shell sizes 20, 24 and 28, consult Amphenol for availability.
All dimensions for reference only.

26482

Series I

Amphenol® Miniature Circular connectors offer twice the number of contacts in just half the size of a standard connector. These miniature connectors, are available in several series, each with varying design characteristics and customer options to meet cost con siderations and provide maximum design flexibility.

Hermetically sealed receptacles have fused compression glass sealed inserts which provide environmental moisture sealing. There are three hermetic styles within the PT bayonet series.

FEATURES:

- All styles are for general duty applications and environmental sealing is achieved with the grommet and clamp design.
- Operating temperature is from –55°C to +125°; Operating voltage to 1000 VAC (RMS) at sea level.

Hermetic MIL-DTL-26482, Series I

Insert Availability Chart

Insert Arrangement	Hermetic PT MS-PT PC	Total Contacts	20	16	12	Service Rating
6-1	X	1	1			I
8-2	X	2	2			I
8-3	X	3	3			I
8-4	X	4	4			I
8-33	X	3	3			I
10-5	X	5	5			I
10-6	X	6	6			I
10-98	X	6	6			I
12-3	X	55	55			I
12-4	X	61	61			I
12-8	X	32	32			I
12-10	X	10	10			I
14-4	X	4			4	I
14-5	X	41				I
14-12	X	21		21	21	II
14-15	X	41	27	14	14	I
14-18	X	55	55			I
14-19	X	61	61			I
14-AA	X	55	55			I
16-8	X	55	55			I
16-26	X	55	55			I
18-11	X	55	55			I
18-30	X	55	55			I
18-32	X	32	32			I
20-16	X	16		16	16	II
20-39	X	39	37	2	2	I
20-41	X	41	41			I
22-21	X	21		21	21	II
22-41	X	41	27	14	14	I
22-55	X	55	55			I
24-61	X	61	61			I

Hermetic MIL-DTL-26482, Series I

Insert Arrangements

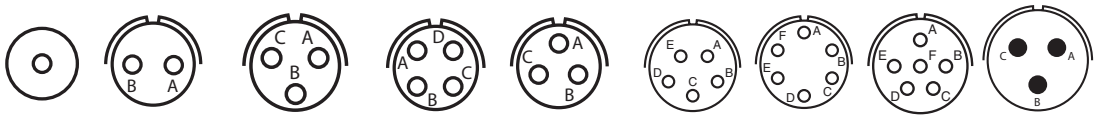

Insert Arrangement	6-1	8-2	8-3	8-4	8-33	10-5	10-6	10-98	12-3
Service Rating	I	I	I	I	I	I	I	I	II
Number of Contacts	1	2	3	4	3	5	6	6	3
Contact Size	20	20	20	20	20	20	20	20	16

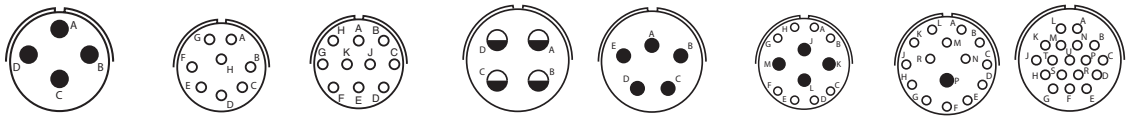

Insert Arrangement	12-4	12-8	12-10	14-4	14-5	14-12		14-15		14-18
Service Rating	I	I	I	I	II	I		I		I
Number of Contacts	4	8	10	4	5	8	4	14	1	18
Contact Size	16	20	20	12	16	20	16	20	16	20

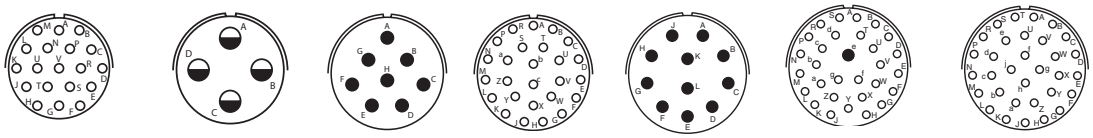

Insert Arrangement	14-19	14-AA	16-8	16-26	18-11	18-30		18-32
Service Rating	I	I	II	I	II	I		I
Number of Contacts	19	4	8	26	11	29	1	32
Contact Size	20	12	16	20	16	20	16	20

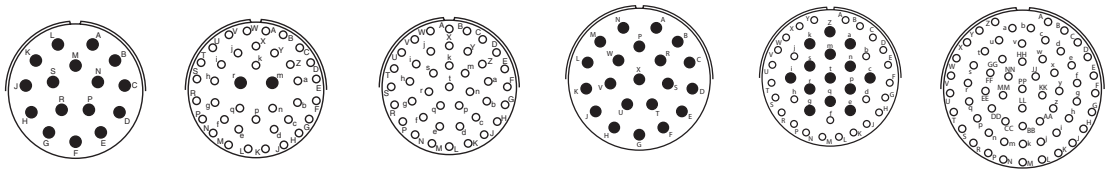

Insert Arrangement	20-16	20-39		20-41	22-21	22-41		24-61
Service Rating	II	I		I	II	I		I
Number of Contacts	16	37	2	41	21	27	14	61
Contact Size	16	20	16	20	16	20	16	20

CONTACT LEGEND

20 16 12 HV 12 Coax 8 Coax

Hermetic MIL-DTL-26482, Series I

Alternate Positioning

ALTERNATE POSITIONING

To avoid cross-plugging problems in applications requiring the use of more than one miniature circular connector of the same size and arrangement, alternate insert rotations are available as indicated in the accompanying chart. As shown in the diagram, the front face of the pin insert is rotated within the shell in a clockwise direction from the normal shell key. The socket insert would be rotated counterclockwise the same number of degrees in respect to the normal shell key.

KEYWAY ROTATION

Shell Size	Insert Arrangement	Insert Rotation			
		W	X	Y	Z
6	6-1	-	-	-	-
8	8-2*	86	72	128	114
8	8-3	80	68	132	120
8	8-4*	79	66	134	121
8	8-33*	82	70	130	118
10	10-5*	85	74	126	115
10	10-6*	90	-	-	-
10	10-98*	90	180	240	270
12	12-3	-	-	180	-
12	12-4*	38	-	-	-
12	12-8	90	112	203	292
12	12-10*	60	155	270	295
14	14-4*	45	-	-	-
14	14-5	40	92	184	273
14	14-12	43	90	-	-
14	14-15	17	110	155	234
14	14-18	15	90	180	270
14	14-19	30	165	315	-
14	14-AA	45	-	-	-
16	16-8	54	152	180	331
16	16-26	60	-	275	338
18	18-11	62	119	241	340
18	18-30	180	193	285	350
18	18-32	85	138	222	265
20	20-16	238	318	333	347
20	20-39	63	144	252	333
20	20-41	45	126	225	-
22	22-21	16	135	175	349
22	22-41	39	135	264	-
22	22-55	30	142	226	314
24	24-61	90	180	270	324

Hermetic MIL-DTL-26482, Series I

How to Order

Amphenol Commercial Air

COMMERCIAL HERMETIC

1. Connector Style	2. Shell Style	3. Service Class	4. Shell Size/ Insert Arrangement	5. Contact Type	6. Alternate Keying Position of Shell
PT	02	H	6-1	P	06

MILITARY HERMETIC

1. Connector Type	2. Specific Number	3. Shell Style	4. Service Class	5. Shell Size/ Insert Arrangement	6. Contact Type	7. Alternate Keying Position of Shell
MS	311	3	H	16-24	P	6

1. COMMERCIAL HERMETIC CONNECTOR STYLE

PT	Standard Bayonet lock connector with Solder Contacts.

2. SHELL STYLE

02	Square Flange Receptacle
07	Jam Nut (D-Hole Mount) Receptacle
I	Solder Mounted Receptacle

3. SERVICE CLASS

H	Hermetic without interfacial Seal
Y	Hermetic with interfacial Seal

4. SHELL SIZE & INSERT ARRANGEMENT

Page 84	Shell Size and Insert Arrangement are together.

5. CONTACT

P	Pin Contacts

6. ALTERNATE KEYING POSITION - ROTATION

Page 86	W, X, Y, Z designate that insert is rotated in its shell from normal position. No letter required for normal (no rotation position)

1. MILITARY CONNECTOR TYPE

MS	Designates Military Standard

2. MILITARY SPECIFIC NUMBER

311	Designates Family number for MIL-DTL-26482, Series 1 Solder Type

3. MILITARY SHELL STYLE

2	Box Mount Receptacle
3	Solder Mount Receptacle
4	Jam Nut Receptacle

4. SERVICE CLASS

H	Hermetic with interfacial Seal

5. SHELL SIZE & INSERT ARRANGEMENT

Page 84	Adding a "Y" designates flat eyelet pin contacts example: 20Y41, or "C" designates solder cup pin contacts example: 20C41.

6. CONTACT

P	Pin Contacts

7. ALTERNATE KEYING POSITION - ROTATION

Page 86	W, X, Y, Z designate that insert is rotated in its shell from normal position. No letter required for normal (no rotation position)

Hermetic connectors are supplied with tin plated shells.

PTIH (MS3113H)

Hermetic Solder Mounting Receptacle

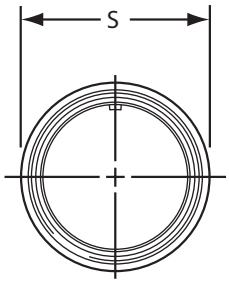

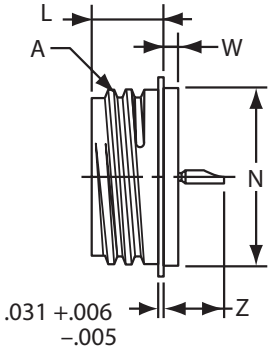

PTIH-XX-XXX - Solder cup pin contacts without interfacial seal
PTIY-XX-XXX - Solder cup pin contacts with interfacial seal
MS3113H-XXCXXX - Solder cup pin contacts with interfacial seal
PTIH-XX-XXX (100) - Flat eyelet pin contacts without interfacial seal
PTIY-XX-XXX (100) - Flat eyelet pin contacts with interfacial seal
MS3113H-XXYXXX - Flat eyelet pin contacts with interfacial seal

Shell Size	Recept. Front View	Receptacle Side View				
	G Dia. Max.	A Dia. +.001 -.005	L +.025 -.016	N Dia. +.001 -.005	W +.011 -.010	Z Max.
6	.511	.348	.447	.438	.094	.386
8	.636	.473	.447	.562	.094	.386
10	.761	.590	.447	.672	.094	.386
12	.855	.750	.447	.781	.094	.386
14	.980	.875	.447	.906	.094	.386
16	1.105	1.000	.447	1.031	.094	.386
18	1.229	1.125	.447	1.156	.094	.386
20	1.323	1.250	.509	1.250	.094	.386
22	1.449	1.375	.509	1.375	.125	.418
24	1.574	1.500	.542	1.500	.125	.418

PT02H

Hermetic Solder Mounting Receptacle

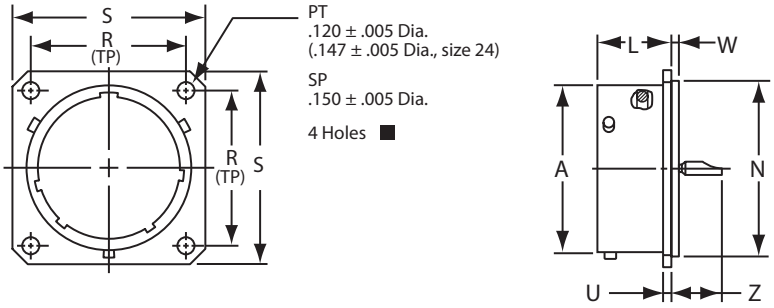

PT02H-XX-XXX - Solder cup pin contacts without interfacial seal
P02Y-XX-XXX - Solder cup pin contacts with interfacial seal
PT02H-XX-XXX (100) - Flat eyelet pin contacts without interfacial seal
PT02Y-XX-XXX (100) - Flat eyelet pin contacts with interfacial seal

Shell Size	Recept. Front View		Receptacle Side View					
	R (TP)	S ±.016	A Dia. +.001 -.005	K ±.015	L +.025 -.015	N Dia. +.001 -.005	U +.011 -.010	Z Max.
6	.511	.688	.348	.047	.494	.438	.062	.344
8	.636	.812	.473	.047	.494	.562	.062	.344
10	.761	.938	.590	.047	.494	.672	.062	.344
12	.855	1.031	.750	.047	.494	.781	.062	.344
14	.980	1.125	.875	.047	.494	.906	.062	.344
16	1.105	1.219	1.000	.047	.494	1.031	.062	.344
18	1.229	1.312	1.125	.047	.494	1.156	.062	.344
20	1.323	1.438	1.250	.047	.556	1.250	.062	.344
22	1.449	1.562	1.375	.079	.556	1.375	.062	.377
24	1.574	1.688	1.500	.079	.588	1.500	.062	.377

PT07H (MS3114H)

Hermetic Jam Nut Receptacle

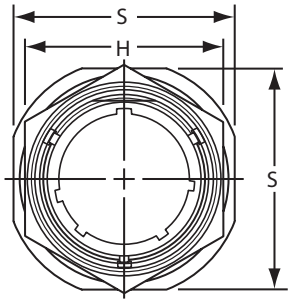

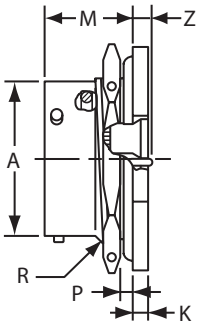

PT07H-XX-XXX - Solder cup pin contacts without interfacial seal
PT07Y-XX-XXX - Solder cup pin contacts with interfacial seal
MS3114H-XXCXXX - Solder cup pin contacts with interfacial seal
PT07H-XX-XXX (100) - Flat eyelet pin contacts without interfacial seal
PT07Y-XX-XXX (100) - Flat eyelet pin contacts with interfacial seal
MS3114H-XXYXXX - Flat eyelet pin contacts with interfacial seal

Shell Size	Recept. Front View		Receptacle Side View						
	S ±.016	H Hex +.001 -.005	A Dia. +.001 -.005	K +.043 -.016	M +.031 -.000	P Panel Thickness Max.	P Panel Thickness Min.	R Thread Class 2A	Z Max.
6	.812	.625	.348	.094	.696	.125	.062	.4375-28 UNEF	.206
8	.938	.750	.473	.047	.696	.125	.062	.5625-24 NEF	.206
10	1.062	.875	.590	.047	.696	.125	.062	.6875-24 NEF	.206
12	1.250	1.062	.750	.047	.696	.125	.062	.8750-20 UNEF	.206
14	1.375	1.188	.875	.047	.696	.125	.062	1.0000-20 UNEF	.206
16	1.500	1.312	1.000	.047	.696	.125	.062	1.1250-18 NEF	.206
18	1.625	1.438	1.125	.047	.696	.125	.062	1.2500-18 NEF	.206
20	1.812	1.562	1.250	.047	.884	.250	.062	1.3750-18 NEF	.081
22	1.938	1.688	1.375	.079	.884	.250	.062	1.5000-18 NEF	.081
24	2.062	1.812	1.500	.079	.917	.250	.062	1.6250-18 NEF	.048

26500

Pyle

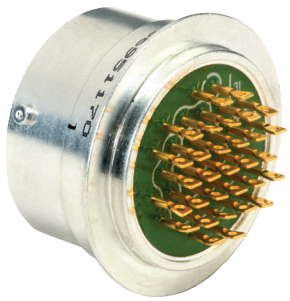

Amphenol®/Pyle Commercial 26500 Connectors are qualified to Military Specification MIL-DTL-26500, as well as numerous high performance customer specifications.

These connectors are available in stainless steel shells, with bayonet or threaded coupling, and are qualified to meet the specifications of the following MIL-DTL-26500 classes:

MIL-DTL-26500 Classes	Amphenol/ Pyle Series Classes	Hardware Description	Finish
Class H Hermetic	HC	CRS/Stainless Steel	Various

Amphenol®/Pyle® is an experienced supplier of highly reliable hermetic connectors for the aircraft industry. Amphenol's ZZL and ZZB series of hermetic receptacles are designed to the requirements of MIL-DTL-26500, they are available in stainless steel shells with gold-plated, nickel-iron alloy contacts.

Hermetic receptacles are available in shell sizes 8, 10, 12, 14, 16, 18, 22, 24 and 28. The hermetic series is offered in a variety of receptacle shell styles, which include solder mount, square flange and "D" hole mount. These connectors can be ordered with either eyelet, solder-well or printed circuit tail pin contacts.

Consult Amphenol Aerospace for more information on hermetic connectors, and for optional connector designs.

Commercial 26500, Pyle

Insert Arrangements

FRONT FACE OF PIN INSERT OR REAR FACE OF SOCKET INSERT ILLUSTRATED

Contact cavities are identified with a spiral guide line indicating cavity sequence. The first and last cavities are numbered and every tenth cavity is bracketed.

Symmetrical about center line.

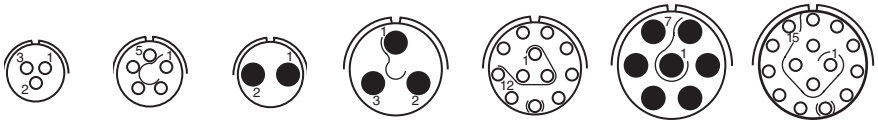

Insert Arrangement	08-03	10-05	10-20	12-03	12-12	14-07	14-15
Service Rating	I	I	I	I	I	I	I
Number of Contacts	3	5	2	3	12	7	15
Contact Size	20	20	16	16	20	16	20

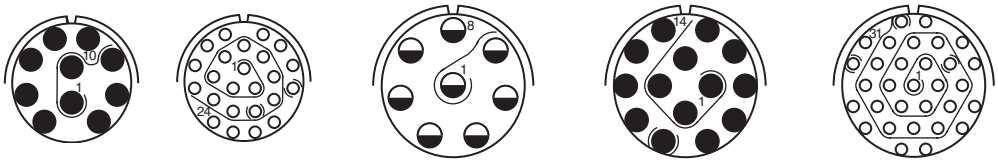

Insert Arrangement	16-10	16-24	18-08	18-14	18-31
Service Rating	I	I	I	I	I
Number of Contacts	10	24	8	14	31
Contact Size	16	20	12	16	20

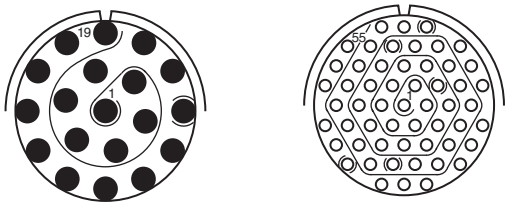

Insert Arrangement	22-19	22-55
Service Rating	I	I
Number of Contacts	19	55
Contact Size	16	20

CONTACT LEGEND ○ 20 ● 16 ◒ 12

Pyle ZZL/ZZB, MIL-DTL-26500 TYPE

Hermetic (three styles), Threaded or Bayonet

Amphenol Commercial Air

HOW TO ORDER COMMERCIAL HERMETIC CONNECTORS

1. Series	2. Service Class	3. Shell Style	4. Shell Size	5. Insert Arrangement	6. Contact Type	7. Alternate Keying	8. Contact Plating	9. Variations
ZZL	HC	14	8	55	P	6	E	H45

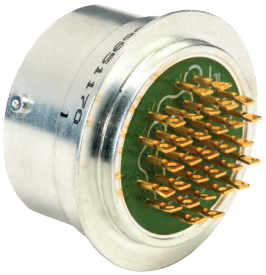

1. SERIES	
ZZL	Threaded Coupling
ZZB	Bayonet Coupling

2. SERVICE CLASS	
HC	Hermetic Class

3. SHELL STYLE	
14	Solder Mount Receptacle
15	Single Hole Mounting Receptacle
17	Square Flange Receptacle

4. SHELL SIZE								
8	10	12	14	16	18	22	24	28

5. INSERT ARRANGEMENT
See page 92

6. CONTACT TYPE	
P	Pin Contacts with standard gold plate

7. ALTERNATE KEYING POSITION
6, 7, 8, 9, 10 (Omit for Normal)
See below

8. CONTACT STYLE	
E	Eyelet
W	Solderwell

Consult Amphenol Aerospace for ordering information of printed circuit tail contacts.

9. VARIATION	
H45	304L Stainless Steel Shell
H52	Tinned Termination Tails
H56	Same as standard; gold contacts
H77	304L Stainless Steel Shell, Inconel Contacts
H127	Same as H125 except 304L Stainless Steel Shell
H146	303 Stainless Steel Shell, 100 Micro-inch Gold
H152	304L Stainless Steel Shell with Individual Beads, Loose Seals
H177	303 Stainless Steel Shell, Loose Seals
H181	Tin Plated Contacts

ALTERNATE KEYING POSITIONS OF SHELLS

ALTERNATE POLARITY KEYWAY ARRANGEMENTS (Shell sizes 12, 14, 16, 18, 20, 22, 24, 28) View of front face of receptacle shell. Angles are counter-clockwise from "N" keyway. For plug shell, the key locations are clockwise when viewed from front of plug.

Position	For Connectors Size 8 and 10				For Connectors Size 12, 14, 16, 18, 20, 22, 24 and 28			
	A	B	C	D	A	B	C	D
Normal	105°	140°	215°	265°	105°	140°	215°	265°
6	102°	132°	248°	320°	18°	149°	192°	259°
7	80°	118°	230°	312°	92°	152°	222°	342°
8	35°	140°	205°	275°	84°	152°	204°	334°
9	64°	155°	234°	304°	24°	135°	199°	240°
Y or 10*	25°	115°	220°	270°	98°	152°	268°	338°

Keying Positions

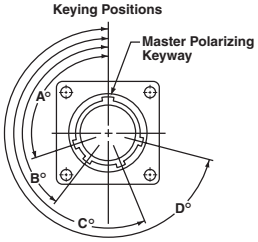

Shown is Engaging Face View of Receptacle Shell with Keyways (Plug Shell Keys would be Opposite)