Amphenol Aerospace

# P3D – D38999 SERIES III

## 3D PRINTED INSERTS AND RAPID PROTOTYPING

Amphenol Aerospace is leading the charge on 3D printed inserts. Utilizing ground breaking in-house capability and industry leading partners, Amphenol can design and manufacture a custom insert assembly in days, not weeks.

### INTRODUCING P3D-D38999 SERIES III:

- Performance comparable to D38999 (see table on page 2)
- No tooling required for new insert patterns
- Perfect for new design prototyping
- Low Risk – Easy to change designs if needed
- Currently available as a prototype unit only, production-certified units coming soon

### AVAILABILITY:

- D38999 Series III available now with standard aluminum shells
- Ability to migrate design to other connector series
- Custom shells available, contact factory for availability
- Non-conductive composite shells available

Proof OF CONCEPT

### PROTOTYPING:

From new design development to small quantities of engineering-built prototypes, PoC is enabling Amphenol to further assist our customers.

CARE

- Simple machining
- Part modification
- Assembly
- 3D printed fit-check parts
- Quick turn component sourcing
- Engineering design consulting
- Prototypes ranging from semi to fully functional parts

**For more information and a quote,**
**Contact** Joe Ryder • Office: +1 (607) 563-5001 • Email: jryder@amphenol-aao.com

Amphenol Aerospace

# PERFORMANCE CHART

| Test Requirement | Connector | |
|---|---|---|
| | D38999 | P3D (Metal Shells) |
| Maintenance Aging | 10 Cycles | 5 Cycles |
| Temperature Cycling | -65C to 175C | -55C to 125C |
| Coupling and Uncoupling Torque | Equivalent | Equivalent |
| Durability | Equivalent | Equivalent |
| Altitude Immersion | Per D38999 | N/A |
| Insert Retention | Equivalent | Equivalent |
| Shell To Shell Conductivity | Equivalent | Equivalent |
| Salt Spray | Equivalent | Equivalent |
| Electrical Engagement | Equivalent | Equivalent |
| External Bending Moment | Equivalent | Equivalent |
| Contact Retention | Equivalent | Equivalent |
| Insulation Resistance | Per D38999 | Equivalent, up to 125C |
| Dielectric Withstanding Voltage | Per D38999 | Equivalent, Sea Level Only |
| Accessory Thread Strength | Equivalent | Equivalent |
| Vibration | Per D38999 | Per D38999, Ambient Temperature |
| Shock | Per D38999 | Per D38999, Ambient Temperature |
| High Temperature Exposure | Per D38999 | Up To 125C |
| Shell Spring Finger Forces | Equivalent | Equivalent |
| EMI Shielding | Equivalent | Equivalent |
| Pin Contact Stability | Equivalent | Equivalent |
| Contact Walkout | Equivalent | Equivalent |
| High Temperature Exposure w/ Loading | Per D38999 | Up To 100C |

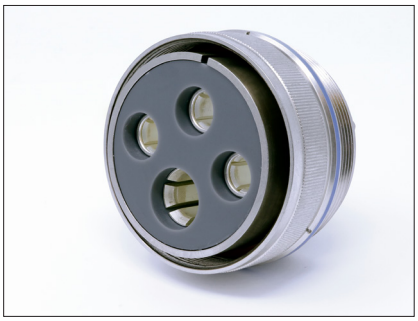

P3D Matrix 5015

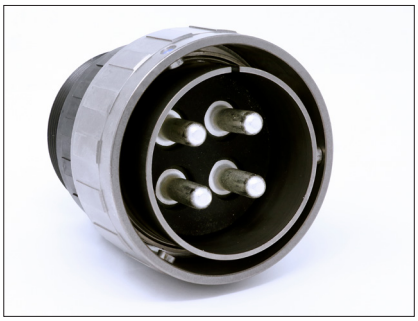

P3D MGT- 5015

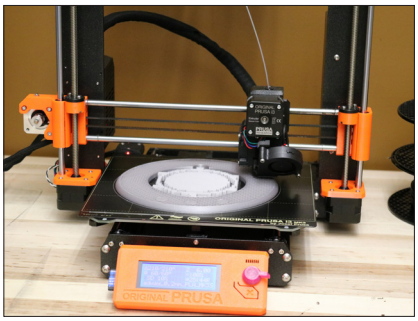


**FOR INFORMATION ON OTHER 3D PRINTED CONNECTOR LINES CONTACT AMPHENOL**

**For more information and a quote,**
**Contact** Joe Ryder • Office: +1 (607) 563-5001 • Email: jryder@amphenol-aao.com

Amphenol Aerospace

# CLASS DESCRIPTION

| Military | Finish | RoHS | Material/Description | Typical Lead Time |
|---|---|---|---|---|
| RF | Electroless Nickel | | Aluminum, 48 hrs. salt spray, 200°C | 2-3 Weeks |
| RKN | Passivated Stainless Steel | | Non-firewall capability, plus 500 hrs. salt spray resistance, 200°C | 3-6 Weeks |
| RL | Stainless Steel with Nickel Plate | | Corrosion resistant steel, 500 hrs. salt spray. 200°C | 3-6 Weeks |
| RW | Olive Drab Cadmium | | Aluminum, 500 hrs. extended salt spray, 175°C | 2-3 Weeks |
| DT | Durmalon Plating | | Nickel-PTFE alternative to Cadmium, 500 hrs. extended salt spray, 175°C | 3-6 Weeks |
| DZ | Zinc-Nickel Plated | | Zinc-Nickel Alternative to Cadmium, 500 hrs. salt spray, 175°C | 3-6 Weeks |

# DESIGN YOUR OWN ARRANGEMENT

| Contact Size | Test Current (AMPS) | |
|---|---|---|
| | Crimp | # Requested |
| 22D | 5 | |
| 20 | 7.5 | |
| 16 | 13 | |
| 12 | 23 | |
| 8 | 60 | |

Amphenol is pleased to offer an all new service, the ability for customers to design their own insert arrangement. Specify the number of conductors needed for each contact size, as well as the desired Service Rating (Default is M). Amphenol will get back to you with the shell size required to fit the contacts at your requested service rating, as well as a contact pattern designed with proper spacing and best engineering practices.

You can also receive a quote for the same custom arrangement in a standard D38999 molded insert, standard leadtime applies + additional lead-time for mold tooling design and manufacture

**SERVICE RATING****

| Service Rating | Suggested Oper. Voltage (Sea Level) | | Test Voltage (Sea Level) |
|---|---|---|---|
| | AC (RMS) | DC | |
| M | 400 | 500 | 1300 VRMS |
| N | 300 | 450 | 1000 VRMS |
| I | 600 | 850 | 1800 VRMS |
| II | 900 | 1250 | 2300 VRMS |

** Please note that the establishment of electrical safety factors is left entirely in the designer's hands, since they are in the best position to know what peak voltage, switching surges, transients, etc. can be expected in a particular circuit.

## STANDARD INSERT ARRANGEMENTS:

Please see Amphenol's D38999 Standard Catalog for available arrangements.

http://www.amphenol-aerospace.com/pdf/catalogs/Amphenol-38999.pdf

In most cases MIL-DTL-D38999 qualified connectors with standard arrangements can be purchased direct or through one of Amphenol's Distribution Partners (list below), however P3D is an excellent option for less common arrangements that may not be as readily available.

http://www.amphenol-aerospace.com/distributors.html

**For more information and a quote,**
**Contact** Joe Ryder • Office: +1 (607) 563-5001 • Email: jryder@amphenol-aao.com

Amphenol Aerospace

# HOW TO ORDER- FOR AVAILABILITY REFERENCE ONLY

## P3D D38999

Contact Product Manager with reference part number for a prototype, not available for standard quoting/purchasing process

| 1. Connector Type | 2. Shell Style | 3. Finish | 4. Shell Size–Insert Arrangement | 5. Contacts-Pin or Socket | 6. Alternate Positions |
|---|---|---|---|---|---|
| XP3D | 00 | RF | 25–35 | P | ** |

### 1. Connector Type

| | |
|---|---|
| XP3D | D38999 with 3D Printed Inserts |

### 2. Shell Style

| | |
|---|---|
| 00 | Wall mount receptacle |
| 02 | Box mount receptacle |
| 06 | Straight plug |
| 07 | Jam Nut Receptacle |
| XX | Other shell styles may be available, contact Amphenol for availability and lead time |

### 3. Finish

| | | |
|---|---|---|
| DT | Durmalon (PTFE): plated alternative to cadmium. Corrosion resistant, 500 hrs. extended salt spray, 175°C | RoHS |
| DZ | Black Zinc-Nickel: alternative to cadmium. 500 hrs. salt spray, conductive, 175°C | RoHS |
| RF | Electroless nickel plated aluminum: 48 hrs salt spray, 200°C | RoHS |
| RW | Corrosion resistant olive drab cadmium: plated aluminum, 500 hrs. extended salt spray, 175°C | |
| RL | Corrosion resistant steel: electro deposited nickel, 500 hrs. salt spray, non firewall, 200°C | RoHS |
| RKN | Corrosion resistant stainless steel: Non-firewall capability, plus 500 hrs. salt spray resistance, 200°C | RoHS |

*Contact factory for custom plating options

### 4. Shell Size & Insert Arrangement

All Mil-spec arrangements available. For custom arrangements contact Amphenol Aerospace

### 5. Contacts

| | |
|---|---|
| S | Socket |
| P | Pin |

### 6. Alternate Positions

"A, B, C, D, E" Keying may be available for extended lead times, contact Amphenol Aerospace for availability

**For more information and a quote,**
**Contact** Joe Ryder • Office: +1 (607) 563-5001 • Email: jryder@amphenol-aao.com

Amphenol Aerospace

# WALL MOUNTING RECEPTACLE

XP3D-00

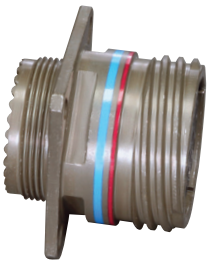

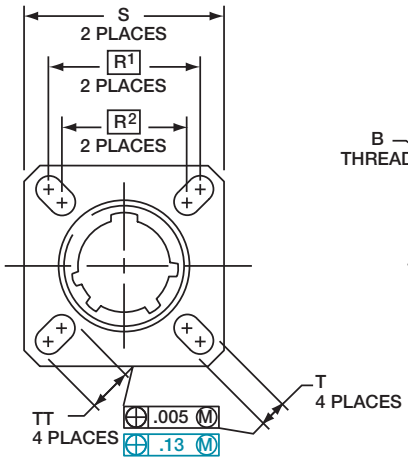


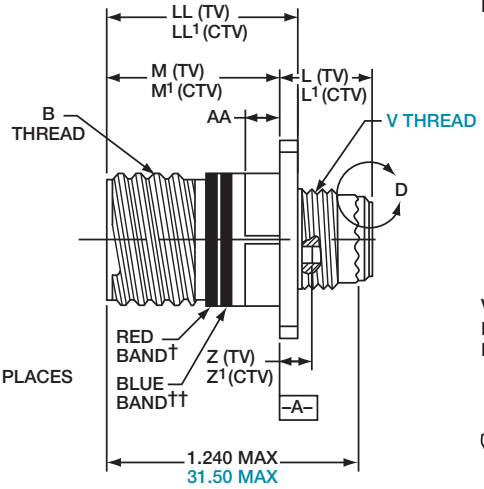


† Red band indicates fully mated
†† Blue band indicates rear release contact retention system

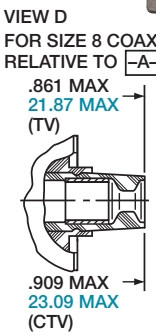


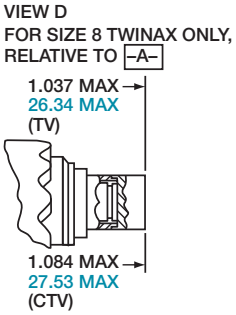


## PANEL HOLE DIMENSIONS

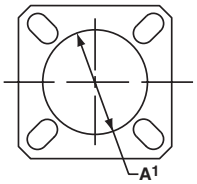


BACK PANEL MOUNTING

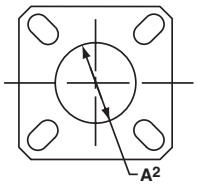


FRONT PANEL MOUNTING

INCHES

| Shell Size | MS Shell Size Code | B Thread Class 2A 0.1P=0.3L-TS (Plated) | L Max. (TV) | L1 Max. (CTV) | M +.000 –.005 (TV) | M1 +.000 –.005 (CTV) | R1 | R2 | S Max. | T ±.008 | Z. Max. (TV) | Z1 Max. (CTV) | A1 Back Panel Mount | A2 Front Panel Mount | AA Max. Panel Thickness | LL +.006 –.000 (TV) | LL1 ±.005 (CTV) | TT ±.008 |
|---|---|---|---|---|---|---|---|---|---|---|---|---|---|---|---|---|---|---|
| 9 | A | .6250 | .469 | .514 | .820 | .773 | .719 | .594 | .948 | .128 | .153 | .198 | .655 | .516 | .234 | .905 | .908 | .216 |
| 11 | B | .7500 | .469 | .514 | .820 | .773 | .812 | .719 | 1.043 | .128 | .153 | .198 | .796 | .625 | .234 | .905 | .908 | .194 |
| 13 | C | .8750 | .469 | .514 | .820 | .773 | .906 | .812 | 1.137 | .128 | .153 | .198 | .922 | .750 | .234 | .905 | .908 | .194 |
| 15 | D | 1.0000 | .469 | .514 | .820 | .773 | .969 | .906 | 1.232 | .128 | .153 | .198 | 1.047 | .906 | .234 | .905 | .908 | .173 |
| 17 | E | 1.1875 | .469 | .514 | .820 | .773 | 1.062 | .969 | 1.323 | .128 | .153 | .198 | 1.219 | 1.016 | .234 | .905 | .908 | .194 |
| 19 | F | 1.2500 | .469 | .514 | .820 | .773 | 1.156 | 1.062 | 1.449 | .128 | .153 | .198 | 1.297 | 1.141 | .234 | .905 | .908 | .194 |
| 21 | G | 1.3750 | .500 | .545 | .790 | .741 | 1.250 | 1.156 | 1.575 | .128 | .183 | .228 | 1.442 | 1.266 | .204 | .905 | .904 | .194 |
| 23 | H | 1.5000 | .500 | .545 | .790 | .741 | 1.375 | 1.250 | 1.701 | .154 | .183 | .228 | 1.547 | 1.375 | .204 | .905 | .904 | .242 |
| 25 | J | 1.6250 | .500 | .545 | .790 | .741 | 1.500 | 1.375 | 1.823 | .154 | .183 | .228 | 1.672 | 1.484 | .204 | .905 | .904 | .242 |

MILLIMETERS

| Shell Size | MS Shell Size Code | L Max. (TV) | L1 Max. (CTV) | M +.00 –.13 (TV) | M1 +.00 –.13 (CTV) | R1 | R2 | S Max. | T ±.20 | V Thread Metric | Z. Max. (TV) | Z1 Max. (CTV) | A1 Back Panel Mount | A2 Front Panel Mount | AA Max. | LL +.15 –.00 (TV) | LL1 ±.13 (CTV) | TT ±.20 |
|---|---|---|---|---|---|---|---|---|---|---|---|---|---|---|---|---|---|---|
| 9 | A | 11.91 | 13.06 | 20.83 | 19.63 | 18.26 | 15.09 | 24.1 | 3.25 | M12X1-6g | 3.89 | 5.03 | 16.66 | 13.11 | 5.94 | 22.99 | 23.06 | 5.49 |
| 11 | B | 11.91 | 13.06 | 20.83 | 19.63 | 20.62 | 18.26 | 26.5 | 3.25 | M15X1-6g | 3.89 | 5.03 | 20.22 | 15.88 | 5.94 | 22.99 | 23.06 | 4.93 |
| 13 | C | 11.91 | 13.06 | 20.83 | 19.63 | 23.01 | 20.62 | 28.9 | 3.25 | M18X1-6g | 3.89 | 5.03 | 23.42 | 19.05 | 5.94 | 22.99 | 23.06 | 4.93 |
| 15 | D | 11.91 | 13.06 | 20.83 | 19.63 | 24.61 | 23.01 | 31.3 | 3.25 | M22X1-6g | 3.89 | 5.03 | 26.59 | 23.01 | 5.94 | 22.99 | 23.06 | 4.39 |
| 17 | E | 11.91 | 13.06 | 20.83 | 19.63 | 26.97 | 24.61 | 33.7 | 3.25 | M25X1-6g | 3.89 | 5.03 | 30.96 | 25.81 | 5.94 | 22.99 | 23.06 | 4.93 |
| 19 | F | 11.91 | 13.06 | 20.83 | 19.63 | 29.36 | 26.97 | 36.9 | 3.25 | M28X1-6g | 3.89 | 5.03 | 32.94 | 28.98 | 5.94 | 22.99 | 23.06 | 4.93 |
| 21 | G | 12.70 | 13.84 | 20.07 | 18.82 | 31.75 | 29.36 | 40.1 | 3.25 | M31X1-6g | 4.65 | 5.79 | 36.12 | 32.16 | 5.18 | 22.99 | 22.96 | 4.93 |
| 23 | H | 12.70 | 13.84 | 20.07 | 18.82 | 34.93 | 31.75 | 43.3 | 3.91 | M34X1-6g | 4.65 | 5.79 | 39.29 | 34.93 | 5.18 | 22.99 | 22.96 | 6.15 |
| 25 | J | 12.70 | 13.84 | 20.07 | 18.82 | 38.10 | 34.93 | 46.4 | 3.91 | M37X1-6g | 4.65 | 5.79 | 42.47 | 37.69 | 5.18 | 22.99 | 22.96 | 6.15 |

All dimensions for reference only

☐ Designates true position dimensioning


**For more information and a quote,**
**Contact** Joe Ryder • Office: +1 (607) 563-5001 • Email: jryder@amphenol-aao.com

Amphenol Aerospace

# BOX MOUNTING RECEPTACLE

XP3D-02

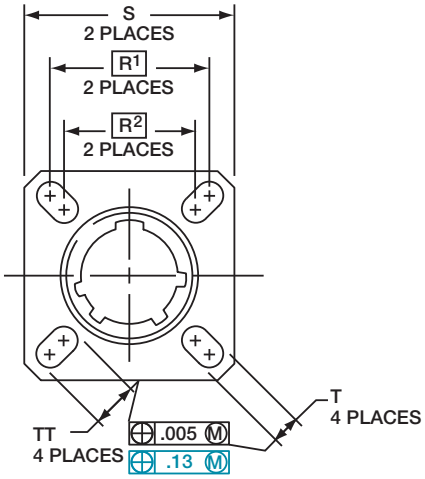


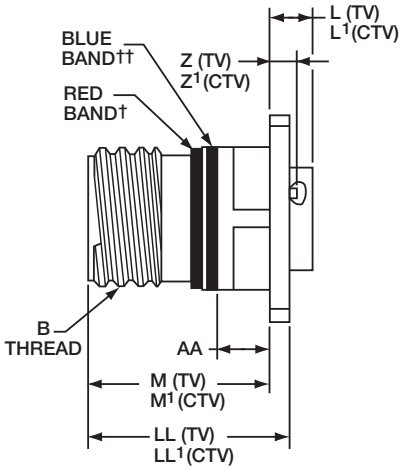


**PANEL HOLE DIMENSIONS**

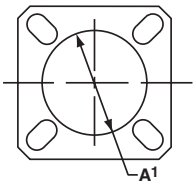


BACK PANEL MOUNTING

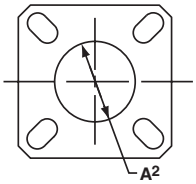


FRONT PANEL MOUNTING

† Red band indicates fully mated
†† Blue band indicates rear release contact retention system

Consult Amphenol Aerospace for availability of composite box mount receptacles.

INCHES

| Shell Size | MS Shell Size Code | B Thread Class 2A 0.1P=0.3L-TS (Plated) | L Max. (TV) | L1 Max. (CTV) | M +.000 –.005 (TV) | M1 +.000 –.005 (CTV) | R1 | R2 | S Max. | T ±.008 | Z. Max. (TV) | Z1 Max. (CTV) | A1 Back Panel Mount | A2 Front Panel Mount | AA Max. Panel Thickness | LL +.006 –.000 (TV) | LL1 ±.005 (CTV) | TT ±.008 |
|---|---|---|---|---|---|---|---|---|---|---|---|---|---|---|---|---|---|---|
| 9 | A | .6250 | .205 | .250 | .820 | .773 | .719 | .594 | .948 | .128 | .153 | .198 | .650 | .510 | .234 | .905 | .908 | .216 |
| 11 | B | .7500 | .205 | .250 | .820 | .773 | .812 | .719 | 1.043 | .128 | .153 | .198 | .800 | .620 | .234 | .905 | .908 | .194 |
| 13 | C | .8750 | .205 | .250 | .820 | .773 | .906 | .812 | 1.137 | .128 | .153 | .198 | .910 | .740 | .234 | .905 | .908 | .194 |
| 15 | D | 1.0000 | .205 | .250 | .820 | .773 | .969 | .906 | 1.232 | .128 | .153 | .198 | 1.040 | .900 | .234 | .905 | .908 | .173 |
| 17 | E | 1.1875 | .205 | .250 | .820 | .773 | 1.062 | .969 | 1.323 | .128 | .153 | .198 | 1.210 | 1.010 | .234 | .905 | .908 | .194 |
| 19 | F | 1.2500 | .205 | .250 | .820 | .773 | 1.156 | 1.062 | 1.449 | .128 | .153 | .198 | 1.280 | 1.130 | .234 | .905 | .908 | .194 |
| 21 | G | 1.3750 | .235 | .280 | .790 | .741 | 1.250 | 1.156 | 1.575 | .128 | .183 | .228 | 1.410 | 1.250 | .204 | .905 | .904 | .194 |
| 23 | H | 1.5000 | .235 | .280 | .790 | .741 | 1.375 | 1.250 | 1.701 | .154 | .183 | .228 | 1.530 | 1.360 | .204 | .905 | .904 | .242 |
| 25 | J | 1.6250 | .235 | .280 | .790 | .741 | 1.500 | 1.375 | 1.823 | .154 | .183 | .228 | 1.660 | 1.470 | .204 | .905 | .904 | .242 |

MILLIMETERS

| Shell Size | MS Shell Size Code | L Max. (TV) | L1 Max. (CTV) | M +.00 –.13 (TV) | M1 +.00 –.13 (CTV) | R1 | R2 | S Max. | T ±.20 | Z. Max. (TV) | Z1 Max. (CTV) | A1 Back Panel Mount | A2 Front Panel Mount | AA Max. | LL +.15 –.00 (TV) | LL1 ±.13 (CTV) | TT ±.20 |
|---|---|---|---|---|---|---|---|---|---|---|---|---|---|---|---|---|---|
| 9 | A | 5.21 | 6.35 | 20.83 | 19.63 | 18.26 | 15.09 | 24.1 | 3.25 | 3.89 | 5.03 | 16.66 | 13.11 | 5.94 | 22.99 | 23.06 | 5.49 |
| 11 | B | 5.21 | 6.35 | 20.83 | 19.63 | 20.62 | 18.26 | 26.5 | 3.25 | 3.89 | 5.03 | 20.22 | 15.88 | 5.94 | 22.99 | 23.06 | 4.93 |
| 13 | C | 5.21 | 6.35 | 20.83 | 19.63 | 23.01 | 20.62 | 28.9 | 3.25 | 3.89 | 5.03 | 23.42 | 19.05 | 5.94 | 22.99 | 23.06 | 4.93 |
| 15 | D | 5.21 | 6.35 | 20.83 | 19.63 | 24.61 | 23.01 | 31.3 | 3.25 | 3.89 | 5.03 | 26.59 | 23.01 | 5.94 | 22.99 | 23.06 | 4.39 |
| 17 | E | 5.21 | 6.35 | 20.83 | 19.63 | 26.97 | 24.61 | 33.7 | 3.25 | 3.89 | 5.03 | 30.96 | 25.81 | 5.94 | 22.99 | 23.06 | 4.93 |
| 19 | F | 5.21 | 6.35 | 20.83 | 19.63 | 29.36 | 26.97 | 36.9 | 3.25 | 3.89 | 5.03 | 32.94 | 28.98 | 5.94 | 22.99 | 23.06 | 4.93 |
| 21 | G | 5.97 | 7.11 | 20.07 | 18.82 | 31.75 | 29.36 | 40.1 | 3.25 | 4.65 | 5.79 | 36.12 | 32.16 | 5.18 | 22.99 | 22.96 | 4.93 |
| 23 | H | 5.97 | 7.11 | 20.07 | 18.82 | 34.92 | 31.75 | 43.3 | 3.91 | 4.65 | 5.79 | 39.29 | 34.93 | 5.18 | 22.99 | 22.96 | 6.15 |
| 25 | J | 5.97 | 7.11 | 20.07 | 18.82 | 38.10 | 34.92 | 46.4 | 3.91 | 4.65 | 5.79 | 42.47 | 37.69 | 5.18 | 22.99 | 22.96 | 6.15 |

All dimensions for reference only

☐ Designates true position dimensioning


**For more information and a quote,**
**Contact** Joe Ryder • Office: +1 (607) 563-5001 • Email: jryder@amphenol-aao.com

Amphenol Aerospace

# JAM NUT RECEPTACLE

XP3D-07

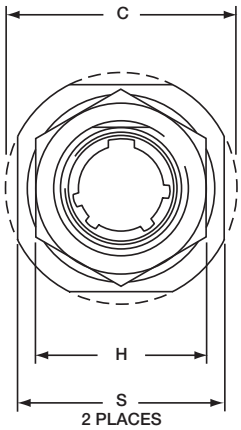


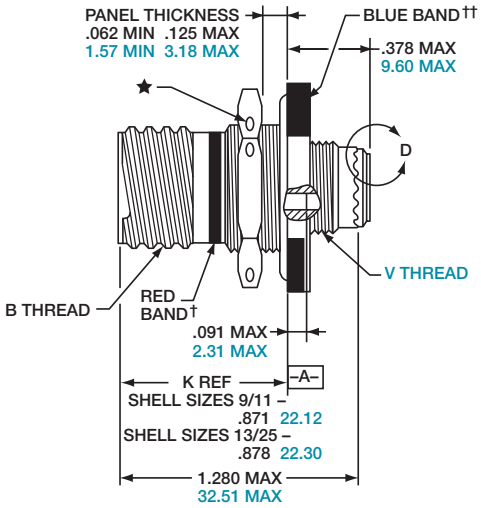


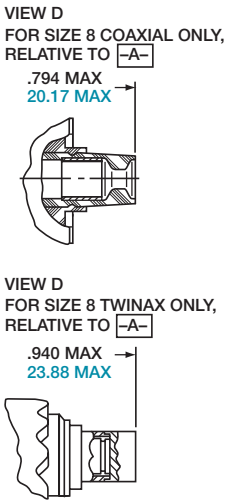


**PANEL HOLE DIMENSIONS**

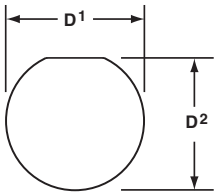


JAM NUT D-HOLE MOUNTING

† Red band indicates fully mated
†† Blue band indicates rear release contact retention system
★ .059 dia min.
1.5 dia min., 3 lockwire holes Formed lockwire hole design (6 holes) is optional

INCHES

| Shell Size | MS Shell Size Code | B Thread Class 2A 0.1P-0.3L-TS (Plated) | C Max. | D1 +.010 –.000 | D2 +.000 –.010 | H Hex +.017 –.016 | S ±.010 |
|---|---|---|---|---|---|---|---|
| 9 | A | .6250 | 1.199 | .693 | .657 | .875 | 1.062 |
| 11 | B | .7500 | 1.386 | .825 | .770 | 1.000 | 1.250 |
| 13 | C | .8750 | 1.511 | 1.010 | .955 | 1.188 | 1.375 |
| 15 | D | 1.0000 | 1.636 | 1.135 | 1.085 | 1.312 | 1.500 |
| 17 | E | 1.1875 | 1.761 | 1.260 | 1.210 | 1.438 | 1.625 |
| 19 | F | 1.2500 | 1.949 | 1.385 | 1.335 | 1.562 | 1.812 |
| 21 | G | 1.3750 | 2.073 | 1.510 | 1.460 | 1.688 | 1.938 |
| 23 | H | 1.5000 | 2.199 | 1.635 | 1.585 | 1.812 | 2.062 |
| 25 | J | 1.6250 | 2.323 | 1.760 | 1.710 | 2.000 | 2.188 |

MILLIMETERS

| Shell Size | MS Shell Size Code | C Max. | D1 +.25 –.00 | D2 +.00 –.25 | H Hex +.43 –.41 | S ±.25 | V Thread Metric |
|---|---|---|---|---|---|---|---|
| 9 | A | 30.45 | 17.60 | 16.70 | 22.23 | 26.97 | M12X1-6g |
| 11 | B | 35.20 | 20.96 | 19.59 | 25.40 | 31.75 | M15X1-6g |
| 13 | C | 38.38 | 25.65 | 24.26 | 30.18 | 34.93 | M18X1-6g |
| 15 | D | 41.55 | 28.83 | 27.56 | 33.32 | 38.10 | M22X1-6g |
| 17 | E | 44.73 | 32.01 | 30.73 | 36.53 | 41.28 | M25X1-6g |
| 19 | F | 49.50 | 35.18 | 33.91 | 39.67 | 46.02 | M28X1-6g |
| 21 | G | 52.65 | 38.35 | 37.08 | 42.80 | 49.23 | M31X1-6g |
| 23 | H | 55.85 | 41.53 | 40.26 | 46.02 | 52.37 | M34X1-6g |
| 25 | J | 59.00 | 44.70 | 43.43 | 50.80 | 55.58 | M37X1-6g |

All dimensions for reference only NOTE: Deep reach receptacles are available for panel thicknesses up to .750 max.

**For more information and a quote,**
**Contact** Joe Ryder • Office: +1 (607) 563-5001 • Email: jryder@amphenol-aao.com

Amphenol Aerospace

# STRAIGHT PLUG

XP3D-06

## METAL

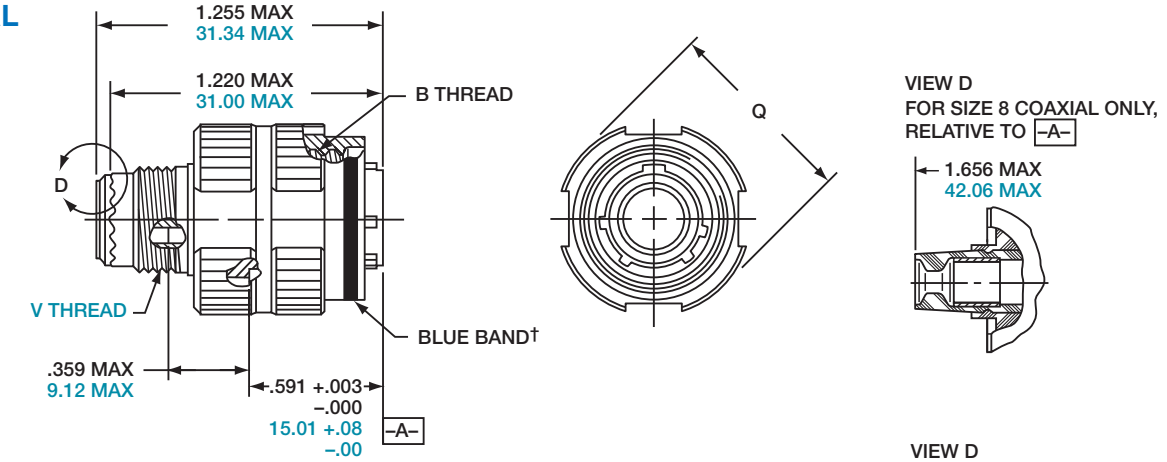


## COMPOSITE

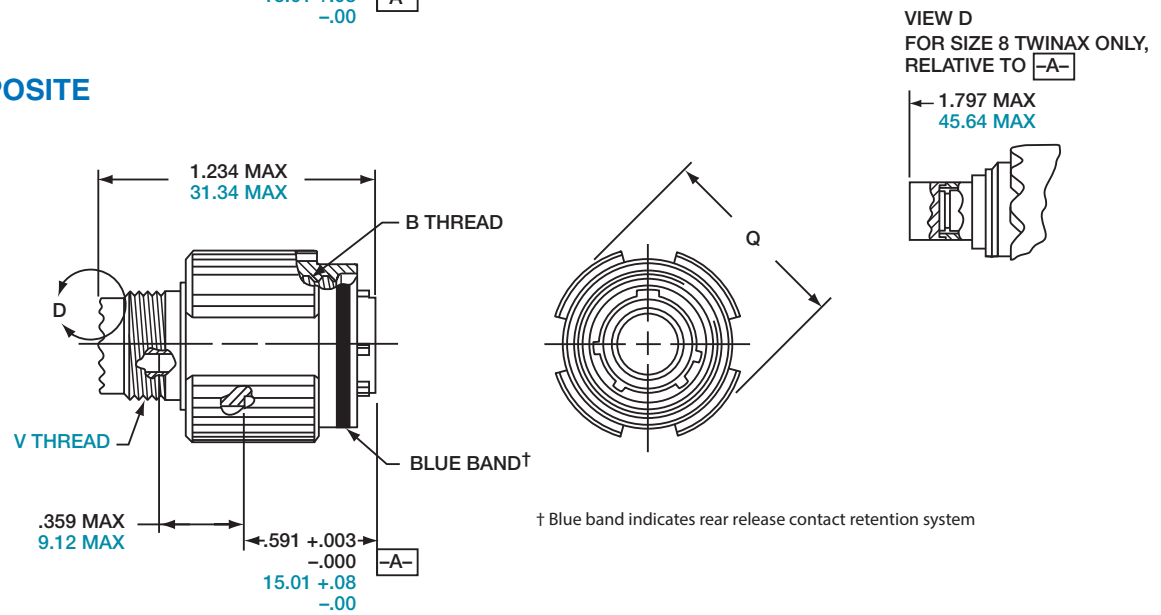


† Blue band indicates rear release contact retention system

INCHES

| Shell Size | MS Shell Size Code | B Thread 0.1P-0.3L-TS-2B (Plated) | Q Dia. Max. |
|---|---|---|---|
| 9 | A | .6250 | .858 |
| 11 | B | .7500 | .984 |
| 13 | C | .8750 | 1.157 |
| 15 | D | 1.0000 | 1.280 |
| 17 | E | 1.1875 | 1.406 |
| 19 | F | 1.2500 | 1.516 |
| 21 | G | 1.3750 | 1.642 |
| 23 | H | 1.5000 | 1.768 |
| 25 | J | 1.6250 | 1.890 |

MILLIMETERS

| Shell Size | MS Shell Size Code | Q Max. | V Thread Metric |
|---|---|---|---|
| 9 | A | 21.8 | M12X1-6g |
| 11 | B | 25.0 | M15X1-6g |
| 13 | C | 29.4 | M18X1-6g |
| 15 | D | 32.5 | M22X1-6g |
| 17 | E | 35.7 | M25X1-6g |
| 19 | F | 38.5 | M28X1-6g |
| 21 | G | 41.7 | M31X1-6g |
| 23 | H | 44.9 | M34X1-6g |
| 25 | J | 48.0 | M37X1-6g |

All dimensions for reference only.

**For more information and a quote,**
**Contact** Joe Ryder • Office: +1 (607) 563-5001 • Email: jryder@amphenol-aao.com